EG Series 2 Standing Pilot

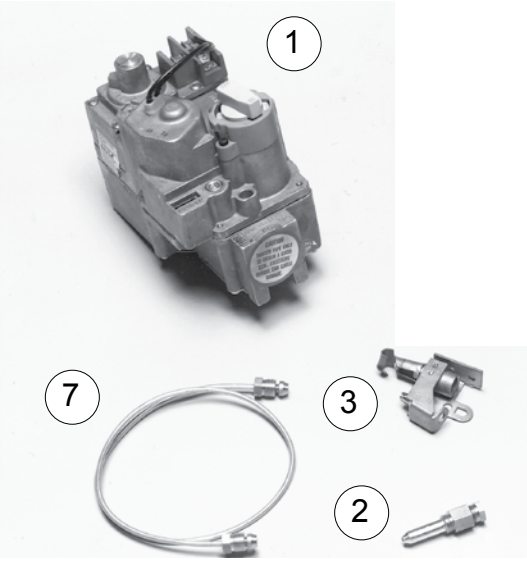

Fig. No.	Part No.	Description	Mfr.	Mfr.'s Part No.	Boiler Size							
					30	35	40	45	50	55	65	75
Components For Natural Gas Only												
1	511-044-360	Combination Gas Valve, ½" X ½" N.P.T., 24 Volt	Honeywell	VR8200A2116	X	X	X	X	X			
			Honeywell	7AO-A1B-042 (7200ER)								
	511-044-256	Combination Gas Valve, 3/4" X 3/4" N.P.T., 24 Volt	Honeywell	VR8300C4050						X	X	
	See Technical Bulletin SB0107	Thermocouple To Thermopile Conversion Kit (Includes: New Gas Valve, Thermopile, Lead Wire Assembly & Instructions)	Robertshaw	5A7501723 (7000 ERHC-S7C-3)								X
2	560-528-980	Natural Gas Pilot Orifice, 0.018" Dia. (For E-38 Pilot Only)	Beckett Gas	P18U2	X	X	X	X	X	X	X	X
	560-528-950	Natural Gas Pilot Orifice, A26. 0.026 Dia. (For Q327 Pilot Only)	Honeywell	388146-AG	X	X	X	X	X	X	X	X

EG Series 2 Standing Pilot

Fig. No.	Part No.	Description	Mfr.	Mfr.'s Part No.	Boiler Size							
Components For Propane Gas Only												
1	511-044-258	Combination Gas Valve, ½" X ½" N.P.T., 24 Volt	Honeywell	VR8200C1074	X	X	X	X	X			
			Honeywell	VR8200A2280	X	X	X	X	X			
	511-044-257	Combination Gas Valve, ¾" X ¾" N.P.T., 24 Volt	Honeywell	VR8300C4100						X	X	
	See Technical Bulletin SB0107	Thermocouple To Thermopile Conversion Kit (Includes: New Gas Valve, Thermopile, Lead Wire Assembly & Instructions)	Robertshaw	5A7-502-789 7000ERHC-LP								X
2	560-528-985	Propane Gas Pilot Orifice. 0.010 Dia. (For E-38 Pilot)	Beckett Gas	P10U1	X	X	X	X	X	X	X	X
	560-528-957	Propane Gas Pilot Orifice. 0.010 Dia. (For Q327 Pilot Only)	Honeywell	388146KR								
Components For Natural and Propane Gas												
3	511-330-197	Pilot Burner, Constant Burning, Thermally Supervised	Beckett Gas	E38A1	X	X	X	X	X	X	X	X
	511-330-186	Pilot Burner, Constant Burning, Thermally Supervised	Honeywell	Q327A1642	X	X	X	X	X	X	X	X
	See Technical Bulletin SB0107	Thermocouple With Spade Terminal Block, 36" Long. Has Been Replaced By One Of Two Thermocouple To Thermopile Conversion Kits. 510-811-461 For Natural Gas Or 510-811-462 For Propane Gas	Honeywell	Q309B1177								X
6	511-724-253	Thermocouple, 48" Long (Clip In)	White-Rodgers	HO6E-048-02B1	X	X	X	X	X	X	X	
	511-724-254	Thermocouple, 30" Long (Screw-In)	Honeywell	Q309B1177	X	X	X	X	X	X	X	
			Johnson Controls	K16RA-30D	X	X	X	X	X	X	X	
			White Rodgers	HO8E-330	X	X	X	X	X	X	X	
7	560-742-860	Pilot Tubing With Compression Fittings, 1/8" O.D., Aluminum, 22 ¾" Long	Weil-McLain		X	X	X	X	X	X	X	X