NORITZ

NO LIMITS WATER HEATER

"Owner's Manual and Installation Guide and Warranty Registration Card"

Model N-063

WARNING: If the information in this manual is not followed exactly, a fire or explosion may result causing property damage, personal injury or death.

- Do not store or use gasoline or other flammable vapors and liquids in the vicinity of this or any other appliance.

- WHAT TO DO IF YOU SMELL GAS

- **Do not try to light any appliance.**
- **Do not touch any electrical switch; do not use any phone in your building.**
- **Immediately call your gas supplier from a neighbor's phone. Follow the gas supplier's instructions.**
- **If you cannot reach your gas supplier, call the fire department.**

- Installation and service must be performed by a qualified installer, service agency or the gas supplier.

Thank you for purchasing a Noritz Gas Water Heater. Before using this water heater, please:

- Read this manual to learn how to operate this water heater correctly.
- Make sure the date and location of purchase indicated on the warranty registration card is included separately.
- Keep this manual (and the warranty registration card) where it can easily be found whenever necessary.

NORITZ America Corporation

SAQ8705

SAQ8705 T

Contents

IMPORTANT SAFETY INFORMATION -1

(Be sure to read and observe all safety information in this manual.)

To prevent damage to property and injury to the user, the icons shown below will be used to warn of varying levels of danger.
Every indication is critical to the safe operation of the water heater and must be understood and observed.
Potential dangers from accidents during installation and use are divided into the following three categories. Closely observe these warnings, they are critical to your safety.

■ Indications depending on the level of damage or injury

⚠ **Danger**	Ignoring this indication may cause immediate danger of death or serious injury.
⚠ **Warning**	Ignoring this indication may result in death or serious injury.
⚠ **Caution**	Ignoring this indication may result in serious injury or physical damage.
Remark	The content following this icon is necessary to understand for safe and easy use of this water heater.

■ Other icons

Electric Shock.	High Temperature.	Be sure to do.	Ground.	
Prohibited	No flame.	Don't touch.	Don't disassemble the equipment.	Don't touch with a wet hand.

⚠ Danger

If you detect a gas leak:

1. **Do not try to light any appliance**
2. **Do not touch any electrical switch; do not use any phone in your building.**
3. **Immediately call your gas supplier from a neighbor's phone. Follow the gas supplier's instructions.**
4. **If you cannot reach your gas supplier, call the fire department.**

A flame or spark may ignite the leaked gas.

Do not use the water heater when the exhaust pipe is displaced, has holes, or is corroded.

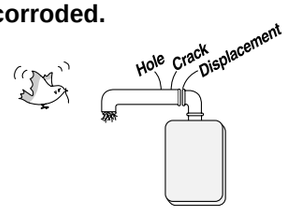

This may allow exhaust to leak from the pipe, which can result in death from carbon monoxide poisoning.

IMPORTANT SAFETY INFORMATION -2

⚠Warning

If you detect abnormal combustion or abnormal odors, or during an earthquake, tornado or fire:

1. **Turn off the hot water supply**
2. **Turn off the power to the water heater**
3. **Turn off gas and water at the main**
4. **Consult the nearest Noritz agent**

This will prevent fire, electric shock or damage to the unit.

Check the temperature of the running hot water by hand before taking a shower.

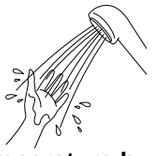

Also check the temperature by hand before stepping into the bath tub.

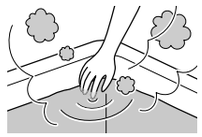

Do not turn off the water heater or change the water temperature while someone is bathing.

This can result in scalding or temperature shock.

Be sure the gas supplied matches the gas on the rating plate.

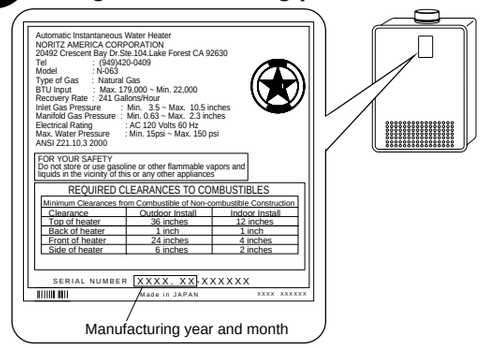

Using an improper gas or electric supply may cause improper operation, fire or electric shock.

Do not allow small children to play unsupervised in the bathroom. Do not allow small children to bathe unsupervised.

Accidents may occur.

Consult the nearest Noritz agent if the water heater location needs to be changed.

Contact a qualified service technician for any necessary repairs, service or maintenance.

⚠Warning

Do not place combustibles such as laundry, newspapers, oils etc. near the heater or the exhaust vent terminal.

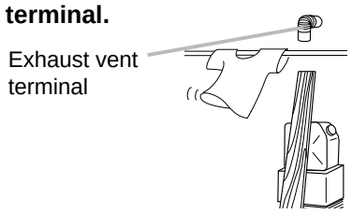

These may cause a fire.

Do not use combustible chemicals such as oil, gasoline, benzene etc. in the vicinity of the heater or the exhaust vent terminal.

These may cause a fire.

Check the air supply vent for dust or obstructions.

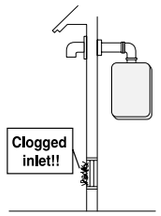

Leave the proper clearance between the water heater and nearby objects (trees, timber, boxes with flammable materials etc.).

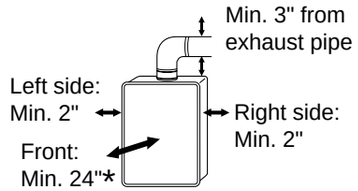

* Indicates suggested clearances for maintenance.

Do not place or use a spray can near the heater or the exhaust vent terminal.

This may result in an explosion or fire.

IMPORTANT SAFETY INFORMATION -3

⚠ Caution

Be sure to electrically ground the unit.

Do not touch the power cord with wet hands.

Keep power cord free of dust.

This can cause a fire.

Do not use a broken or modified power cord. Do not bind, bend or stretch power cords.

Do not place things on them, scratch. Do not scratch, modify or subject them to impact or force.

Do not use the water heater for other than hot water supply, shower and bath.

To prevent unexpected accidents.

Do not touch the exhaust vent pipe during or immediately after operation of the water heater.

Do not connect the water heater to a solar water heater.

This can result in unreliable temperature control, scalding or equipment failure.

Do not use hair spray or spray detergent in the vicinity of the heater.

These may cause damage to the heater.

Remark

Do not drink water that was inside the unit for an extended period of time, do not drink the water that comes out of the unit just after the first use of hot water in the morning.

Use it for other purposes.

Clean the filter on the water inlet.

If you don't know where the filter is, contact the nearest Noritz agent.

Keep the area around the unit clean.

If boxes, weeds, cobwebs, cockroaches etc. are allowed to be in the vicinity of the unit, damage or fire can result.

Do not install the equipment where the exhaust will blow on walls or windows.

This may cause damage or discoloration.

Do not use spring water or well water.

This can cause damage and reduce durability.

Check for proper combustion during operation and that the flame stops after operation is finished.

To prevent accidents due to gas.

Do not disassemble the remote controller.

This may cause damage to the heater or unexpected accidents.

Do not use benzene, oil or fat detergents to clean the remote controller.

This may cause deformation.

Do not get the remote controller wet.

Although it is waterproof, too much water can cause damage.

Do not splash water on the remote controller. Do not expose the remote controller to steam.

Do not locate the remote controller near stoves or ovens, this may cause damage or failure.

Take measures to prevent the unit from freezing. (☞p.17)

If water is allowed to freeze inside the unit, the unit may be damaged, and water can leak out of it.

Take necessary measures to prevent freezing of water and leakage of gas when leaving the unit unused for long periods of time. (☞p.18)

If it is snowing, check the air inlet, exhaust gas vent and exhaust vent terminal for blockage.

This can result in improper function or damage to the unit.

Do not use parts other than those specified for this equipment.

Name and Functions of Components

Main unit

Indoor wall mounted power vented model

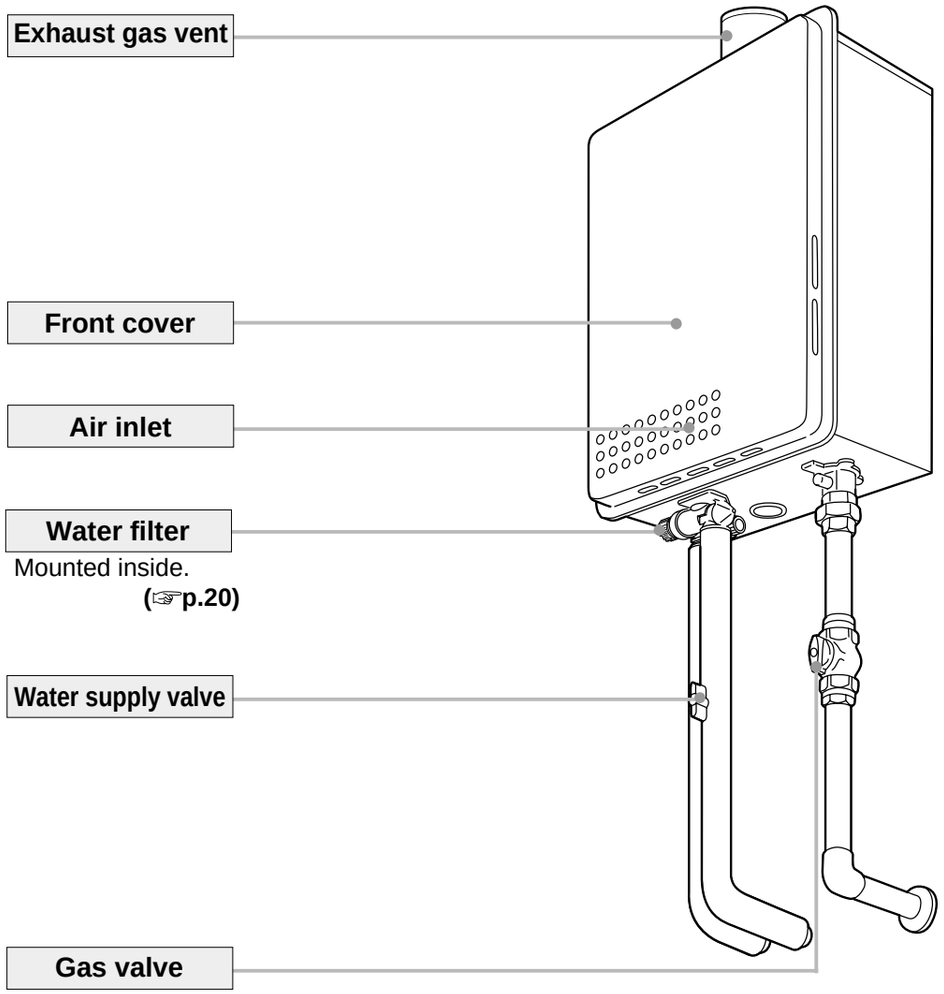

*** The above illustration shows an example of installation.**
The shape of the piping, and the location of the water main, gas main and power cord will depend on the specific installation.

Operation (Remote Controller)

Main remote controller (RC-7646M)

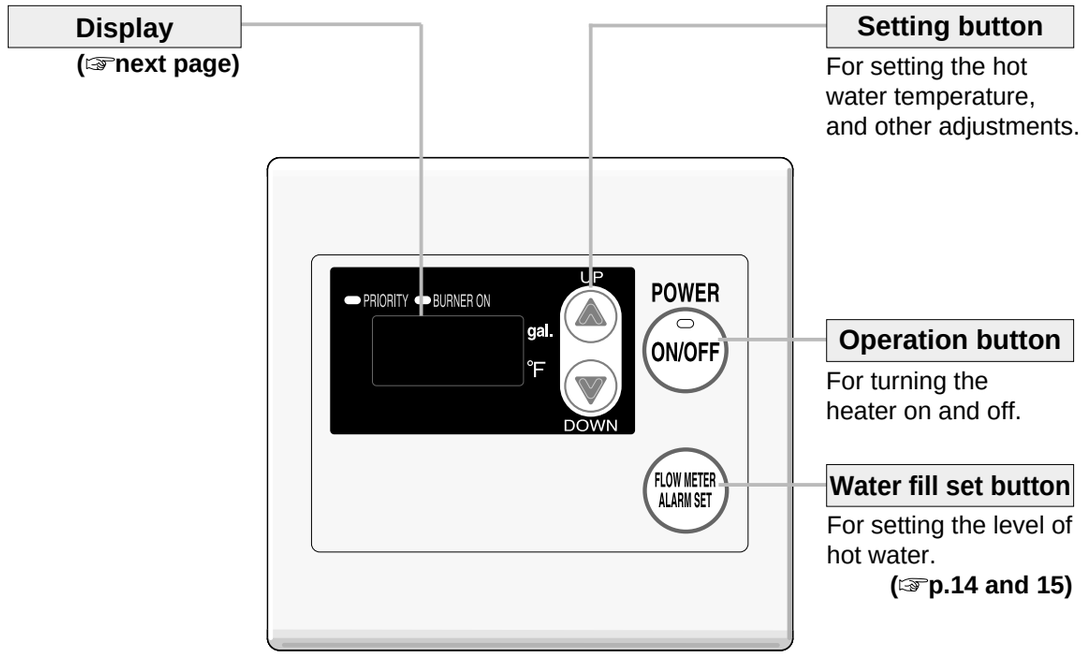

* Before use, remove the protective sheet from the remote controller surface.

Display

The illustration below shows the remote controller display. What is actually displayed depends on how the water heater is set.

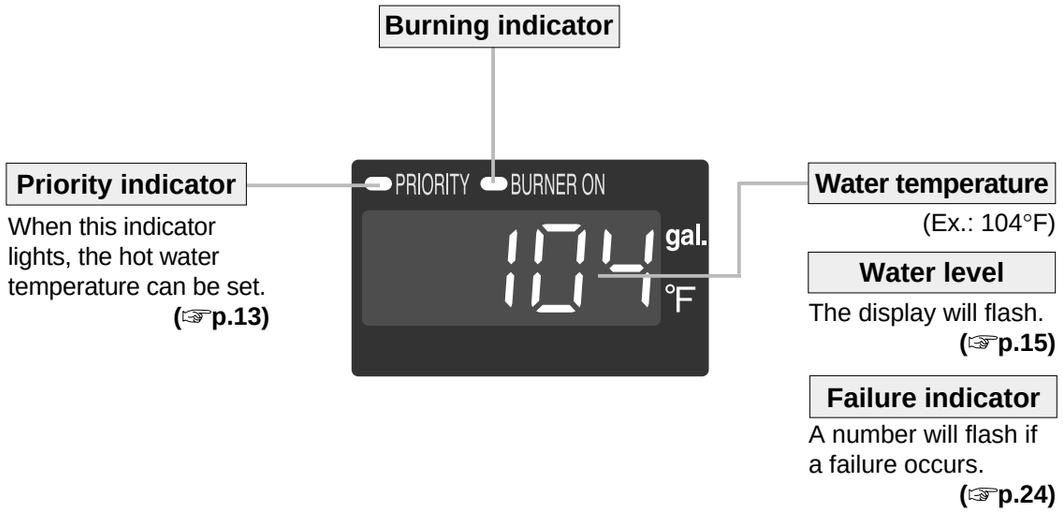

Initial Operation

Before the first use of your water heater, the following preparations and checks are necessary.

Follow steps **1 through 4**.

1 Fully open the water supply valve. (Turn the handle so that is lines up with the pipe.)

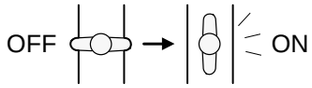

2 Open a hot water fixture to confirm that water is available, and then close the fixture again.

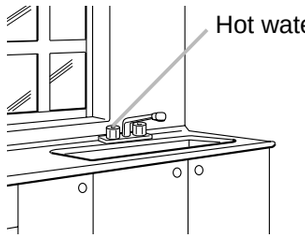

3 Fully open the gas valve.

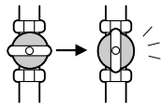

4 Turn on the power.

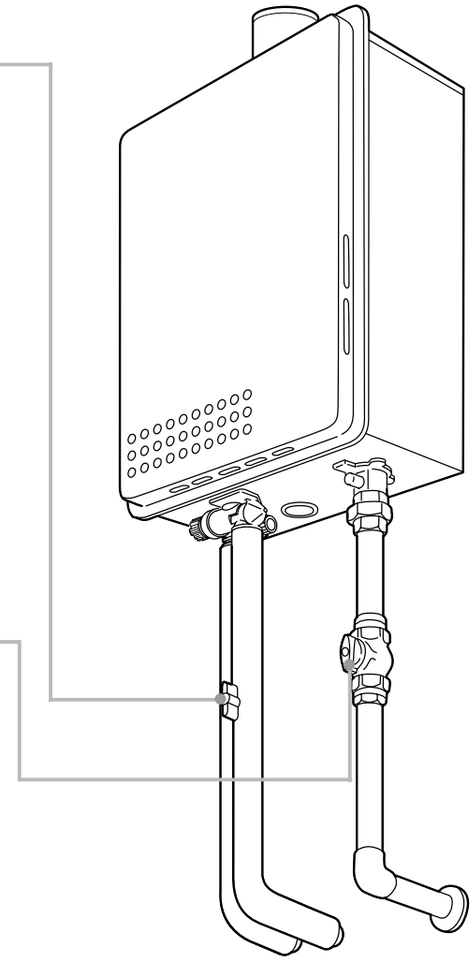

Running /Adjusting Hot Water

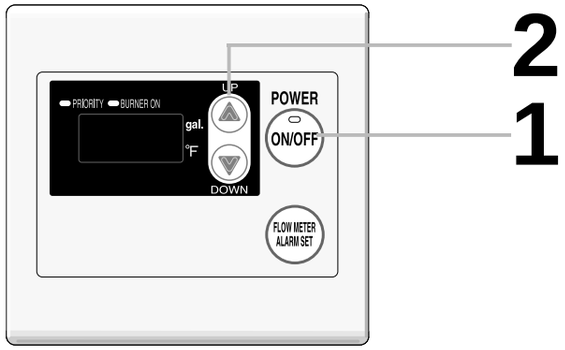

<With Operation button Off>

1 Press the Operation button.

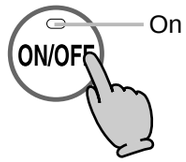

The temperature will be indicated on the display.

Previously set temperature (Ex.: 104°F)

2 Adjust temperature. (Check the temperature if you will not be changing it.)

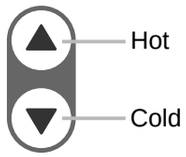

Check the indicator lights.

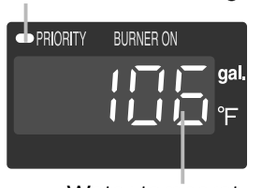

Water temperature

3 Run hot water.

On

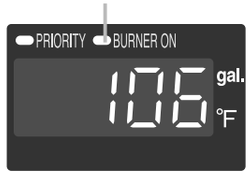

4 Stop the hot water.

Off

(°F: The figures shown below are just examples. The actual temperature setting necessary depends on the usage, the length of piping and the season.)

99	100	102	104	106	108	109	111	113	115	117	118	140	167
Washing dishes, etc.		Shower, hot water supply, etc.					Hot water supply, etc.					High temperature	

*Initial setting (factory setting at shipment)=104°F

If using a mixing valve, set the water temperature on the remote control approximately 18°F higher than usual.

If the remote controller was left set at 167°F the last time it was used, the setting will drop to 140°F as a safety precaution.

Caution


High Temperature

To prevent scalding:

Temperature above 125 degree can scald.

- Check the water temperature by hand before bathing or showering.
- When you set the temperature to 140°F or 167°F, the display will flash for 10 seconds to remind you that this is a high temperature.
- Be careful the next time you use the heater after setting it at 140°F or 167°F. Check the temperature setting before using.
- Do not allow anyone to change the water temperature while hot water is running.

<Remote controller display>

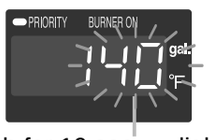

Flash for 10 sec → light up

How to use

Tub Level Alarm

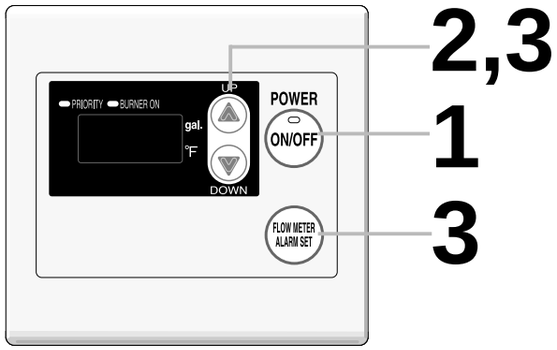

<With the operation button off>

Preparation

1. Plug the bath drain.

1 Press the Operation button.

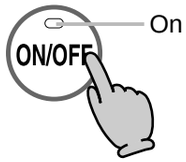

The temperature will be indicated on the display.

On

Previously set temperature (example: 104°F)

2 Adjust temperature. (Check the temperature if you will not be changing it.)

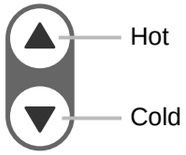

Check the indicator lights.

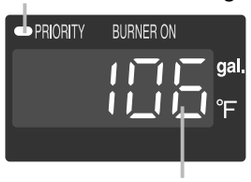

Water temperature

The alarm will sound for ten seconds when the water reaches the specified level.

(But the water will continue to run unless it is manually turned off.)

Water temperature

The temperatures shown below are only examples. Your actual reaction to set temperatures will depend on the season and the length of piping.

99	100	102	104	106	108	109	111	113	115	117	118
Warm			Warmer				Hot				

* Initial factory setting at shipment: 104°F

<The setting is remembered>

3 Adjust tub level setting.

Press the operation button (the level setting indicator will flash) and then the setting button.

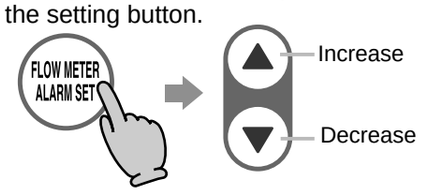

Set the water level of your tub, the choices for settings are anything between 10 and 65 gal., in increments of 5, and 80, 90, 105 and 990 gal. (Reference values)

Note: The alarm will not sound if it is set for 990 gal.

Water level will be flashing (ex. 45 gal.)

* The level can be adjusted while the indicator is flashing.
* The temperature will return after ten seconds.

4 Run the hot water.

On

5 Stop the hot water when the alarm sounds.

The alarm will sound when the specified level has been reached. Stop the water.

Note: The alarm will not sound if it is set for 990 gal.

Off

- If water is being used besides what is needed for the tub, the alarm will sound before the set level is reached in the tub.
- If there was water remaining in the tub, or if the water is not manually turned off after the buzzer sounds, the tub may overflow.
- If there was water remaining in the tub, the temperature after the tub is filled the rest of the way will be less than the set temperature.

Muting the Sound of the Remote Controller

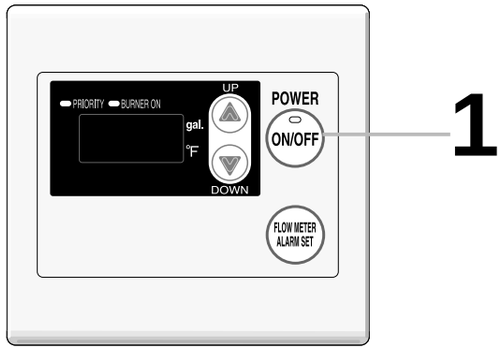

When any button on the remote controller is pushed, a sound is emitted. This sound can be muted if you desire.

1 With the remote controller off, press and hold the operation button for five seconds to turn the sound on or off.

Mute	Sound

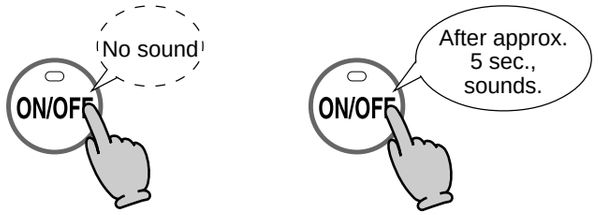

Water level alarm cannot be muted.

Prevention of damage caused by freezing in cold temperatures

The heater and piping can be damaged if cold temperatures cause water to freeze inside the unit. The damage can be prevented with the following method:

Normal cold [outside temperatures more than 5°F with no wind]

At these temperatures, the units have freeze prevention heaters that will prevent freezing.

* **Do not disconnect the power. The freeze prevention heaters will not work if the power is disconnected.**
* The freeze prevention will work regardless of whether the operation button on the remote controller has been turned on.

When the temperature drops, the **freeze-prevention heaters** are automatically activated to keep the unit warm and prevent it from freezing.	The freeze prevention heaters will not prevent the plumbing external to the unit from freezing. Protect this plumbing with insulation or an electric heater. If you are still worried that your heater will freeze, contact the nearest Noritz agent.

For severely cold temperatures [outside temperature including wind chill less than 5°F]

Run water to prevent freezing.

1. Push the operation button and confirm that the operation light comes on.
2. Close the gas supply valve.
3. Open a hot water fixture and let it run for approx. 1 minute, and then check that the number 11 is flashing on the remote controller display.
   * It is possible that a different number may be displayed on the remote controller, but as long as it is flashing, you may continue.
4. Open a hot water fixture, and keep a small amount of hot water running. (.1 gal./minute or about .2” thick.)
   * If there is a mixing valve, set it to the highest level.
5. The flow may become unstable from time to time. Check the flow 30 minutes later.

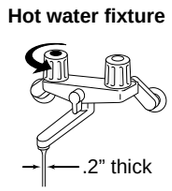

- This method can be applied not only to the heater, but also to the water supply, water piping and a mixing valve.
- Remember that if the mixing valve is set to the maximum level, there is a risk of scalding.
- If freezing still might occur, drain the water from the unit following the steps on p.18.

If water will not flow because it is frozen

1. Close the gas and water valves.
2. Turn off the operation button.
3. Open the water supply valve from time to time to check whether water is running.
4. When the water is flowing again, check for water leaks from the equipment and piping, or follow steps 1 through 4 on p.11 (“Initial Operation”).

- If the heater or the piping is frozen, do not use the heater, or it may get damaged.
- Repairs for damage caused by freezing is not covered by the warranty.

If the water heater will not be used for a long period of time

Drain the water as follows:

Caution High Temperature

To avoid burns, wait until the equipment cools down before draining the water. The appliance remains hot after it is turned off.

Provide a pan or bucket for drainage to prevent water damage.

1 Turn on the operation button, and check that the light comes on.

2 Close the gas valve.

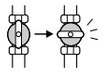

3 Open a hot water fixture, and keep it open for approximately 1 minute until the number 11 is flashing on the remote display.

* It is possible that another number may displayed on the remote controller, but as long as the number is flashing, you may continue.

4 Close the water supply valve.

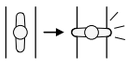

5 Keep the operation switch on and disconnect the power. **Do not touch with wet hands.**

6 Fully open all hot water fixtures.

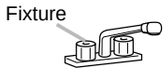

7 Remove inlet and outlet drain plugs. (0.1 to 0.2 gal. will drain out of the unit.)

8 When the water is completely drained, replace all drain plugs and close the hot water fixtures.

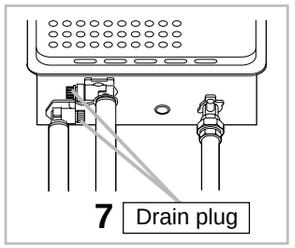

This method cannot prevent the water supply, hot water piping and water supply valve from freezing.
Be sure to protect them with insulation or an electric heater.
(If you are still worried the unit will freeze, consult the nearest Noritz agent.)

To turn the unit back on

1. Check that all drain plugs are inserted.
2. Check that all hot water fixtures are closed.
3. Follow the procedure on p.11 “Initial operation”.

Regular Maintenance

Inspection (Once a month)

Caution High Temperature

To avoid burns, wait until the equipment cools down before draining the water. The appliance remains hot after it is turned off.

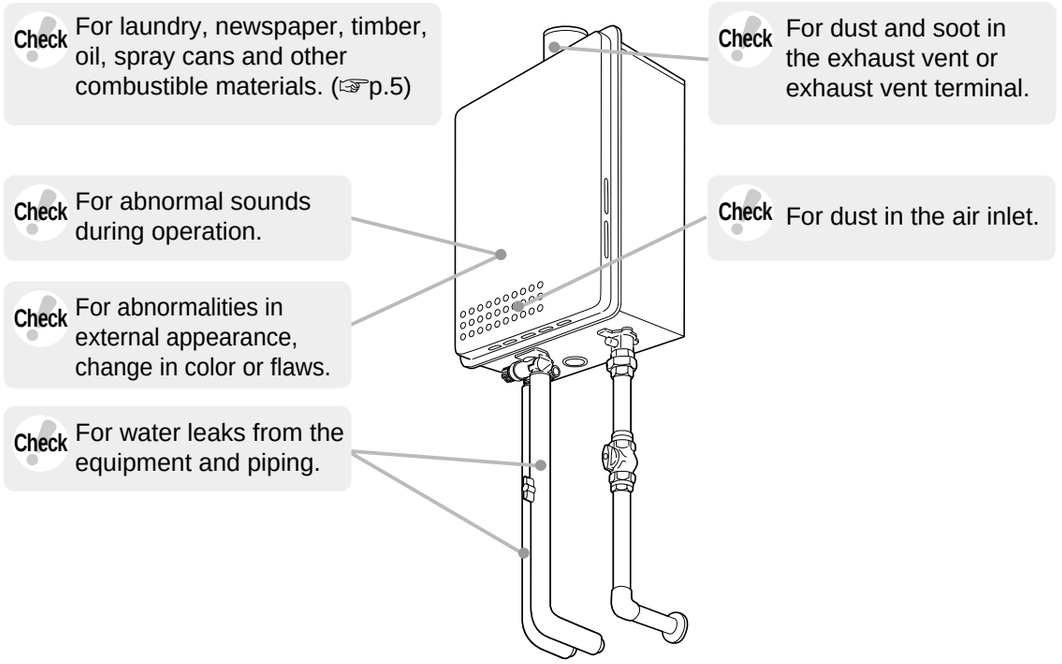

Maintenance (once a month)

Equipment

Wipe the outside surface with a wet cloth, then dry the surface. Use a neutral detergent to clean any stains.

Remote controller

Wipe the surface with a wet cloth.

- Do not use benzene, oil or fatty detergent to clean the remote controller. Deformation may occur.
- The remote controller is waterproof, but it should be kept dry as much as possible.

Maintenance (once a month)

Water filter

If the water filter is covered with debris, the hot water will not run smoothly, or cold water may come out. Clean the filter as explained below.

* **To avoid burns, wait until the equipment cools down before draining the water. The appliance remains hot after it is turned off.**

1. Close the water supply valve.
2. Open all hot water fixtures.
3. Loosen the Drainage Outlet.
4. Remove the Drainage Outlet from the band. (see illustration on right).
   * Water will drain out.
5. Clean the filter with a brush under running water.
6. Replace and screw the Drainage Outlet closed.(Take care not to lose the packing.)
7. Close all hot water fixtures.
8. Open the water supply valve and check that water is not leaking from the Drainage Outlet.

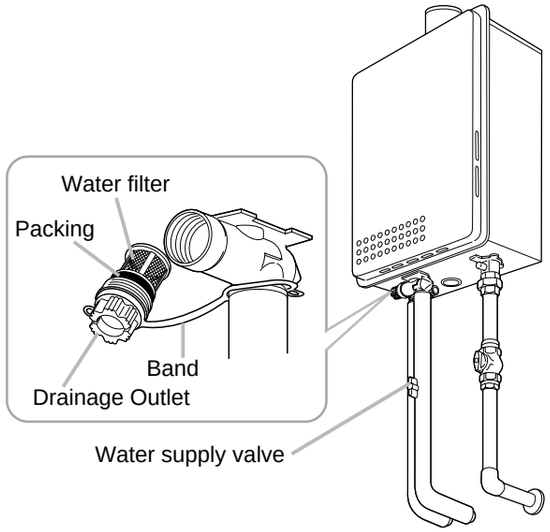

Troubleshooting-1

Temperature

Hot water is not available when the hot water fixture is opened.	• Are the gas and water supply valves fully open? • Is the water supply cut off? • Is the hot water fixture sufficiently open? • Is the heater frozen? • Is the gas meter working? • (For LP) Is there enough gas in the tank? • Is the operation button turned on? • Have you allowed enough time for the cold water in the pipes to drain out?
Hot water is not available at low temperatures.	• Are the gas and water supply valves fully open? • Is the water temperature setting appropriate (☞p.12 and p.13)? • If the supply water is at a high temperature, you may need to increase the flow rate through the heater to get a low temperature out of it.
Hot water is not available at high temperatures.	• Are the gas and water supply valves fully open? • Is the water temperature setting appropriate (☞p.12 and p.13)?
Cold water comes out when the fixture is barely opened. Only cold water is available at low flow rates.	• The heater stops burning when the flow of hot water becomes less than 0.75 GPM. Open the hot water fixture more, and the water temperature will stabilize.

Troubleshooting-2

Amount of hot water

The pressure at a certain fixture is not constant.	• When hot water is demanded at other fixtures, the amount available may be reduced. • Pressure fluctuations and other plumbing conditions can cause the temperature and pressure at a fixture to be unstable, but it should stabilize after a short time. • To keep the temperature stable, the heater limits the amount of water that can flow through it to a small amount initially, but the amount increases over time.

Remote controller

The operation light does not come on	• Has there been a power failure? • Is the power connected properly?
The water temperature changes after a power failure or when the power is disconnected.	• The time on the controller may need to be reset after a power failure or after the power has been disconnected. Also, the hot water temperature indicator, and tub level alarm may have been reset.
The display (LCD) is unstable.	• The liquid crystal display may become unstable when the remote controller is cleaned with a dry cloth (Leave it for 30 minutes and it will return to normal).

Sound

The fan can be heard after operation is stopped.	• The fan runs for a while to accelerate ignition after the operation button is turned on.

Other

The Heater stops burning during operation.	• Are the gas and water supply valves fully open? • Is the water supply cut off? • Is the hot water fixture sufficiently open? • Is the gas meter working? • (For LP) Is there enough gas in the tank?
White smoke comes out of the exhaust vent on a cold day.	• This is normal on cold days.
The hot water becomes turbid.	• This is harmless. Small bubbles appear as the air in the water is heated and depressurized rapidly to atmospheric pressure. It is similar to the bubbles in beer or carbonated beverages.
Water leaks from the drain plugs on the outlet.	• When the main unit is highly pressurized, water will leak from the drain plugs as a safety so that the unit is not damaged by the high pressure. • These plugs are pressure relief valves. If water is leaking out of them, excessive pressure is being supplied to the unit.

Troubleshooting-3

Check for error code on the remote controller

If there is a problem with the unit, a numerical error code will flash on the remote controller.
If this occurs, take appropriate measures as listed below.

Ex. When an error code appears, the display and the operation light will flash together.

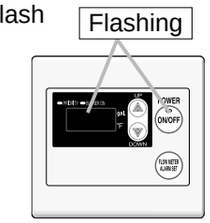

<Main remote controller>

Indication	Cause	Action
01	Burner has been used continuously for 60 minutes or more.	Turn off the hot watertap, press the power switch OFF and the press it ON again. If <01> is not displayed, then operation is nomal.
11	Ignition error	Check whether the gas valve is open. Turn off the operation button, open a hot water fixture, and turn on the operation button again. If the problem is solved, the flashing number will disappear.

Contact our sales agent if:

- Any other flashing number appears.
- An error code is indicated again after the above actions were followed.
- You have any other questions.

Follow-up service

Requesting service

First follow the instructions in the troubleshooting section (p.21 to p.24). If the error is not corrected, contact our sales agent.

We will need to know:
The Model ..... (check the rating plate)
*See p.4 for the location of the label
Date of purchase ... (see the warranty)
Details of error ..... (flashing error codes)
Your name, address, and telephone number
Desired date of visit

* It should be noted that a request for service may be rejected if the water heater is installed in a location where working on the unit may be dangerous. If so, you will have to consult a plumber to remove the unit and bring it to a safe location.

Warranty

A warranty registration card is included separately.
Be sure that the shop name, date of purchase and other necessary items are filled in.
Read the content carefully, and keep the warranty card in a safe place.

For repairs after the warranty period, there will be a charge on any service, and service will only be performed if the unit is deemed repairable.

Minimum period of time for stocking repair parts

Noritz will stock repair parts for this unit for a minimum of seven years after production has ceased.
These are the parts necessary to repair or maintain this unit.

Reinstallation

If you want to reinstall the appliance at a different location, confirm that the gas and power supply indicated on the rating plate are available at the new location. If you are not sure, consult the local utility company.

If you move to a region that uses a different type of gas, conversion and adjustment of the appliance will be necessary. This work will be charged for even during the warranty period.

Specifications

- Specifications may be changed without prior notice.
- The capacity may differ slightly, depending on the water pressure, water supply, piping conditions, and water temperature.

Specifications

Item		Specification
Model Name		N-063
Type	Installation Air Supply/Exhaust	Indoor or Outdoor, Wall Hanging Power Vented
Ignition		Direct Ignition
Operating Pressure		15-150 PSI
Minimum Flow Rate		0.75 GPM
Dimensions		20.5"(Height) x 13.8"(Width) x 6.7"(Depth)
Weight		38 lbs.
Water Holding Capacity		0.2 Gallon
Connection Sizes	Water Inlet	3/4"
	Hot Water Outlet	3/4"
	Gas Inlet	1/2"
Power Supply	Supply	120 VAC (60Hz)
	Consumption	NG: XXXW, LP: XXXW, Freeze Prevention 125W
Materials	Casing	Zincified Steel Plate/Acryl Coating
	Flue Collar	Stainless Steel
	Heat Exchanger	Copper Sheeting, Copper Tubing
Safety Devices		Flame Rod, Thermal Fuse, Pressure Relief Valve, Lightning Protection Device (ZNR), Electric Leakage Prevention Device, Overheat Prevention Device, Freezing Prevention Device, Fan Rotation Detector
Accessories		Temperature Control Panel, Anchoring Screws

Performance table

Item		Maximum Performance	Minimum Performance
Gas Consumption	NG	179,000 btuh	22,000 btuh
	LP	179,000 btuh	22,000 btuh
Hot Water Capacity	45°F Rise	6.3 Gal./min.	
	72°F Rise	4.0 Gal./min.	
Capacity Range		0.75-6.3 Gal./min.	
Temperature Settings		99-118,140,167°F(14 Options)	
Default Temperature Options		108,113,140,167°F(Original is 108°F)	

External outfitting

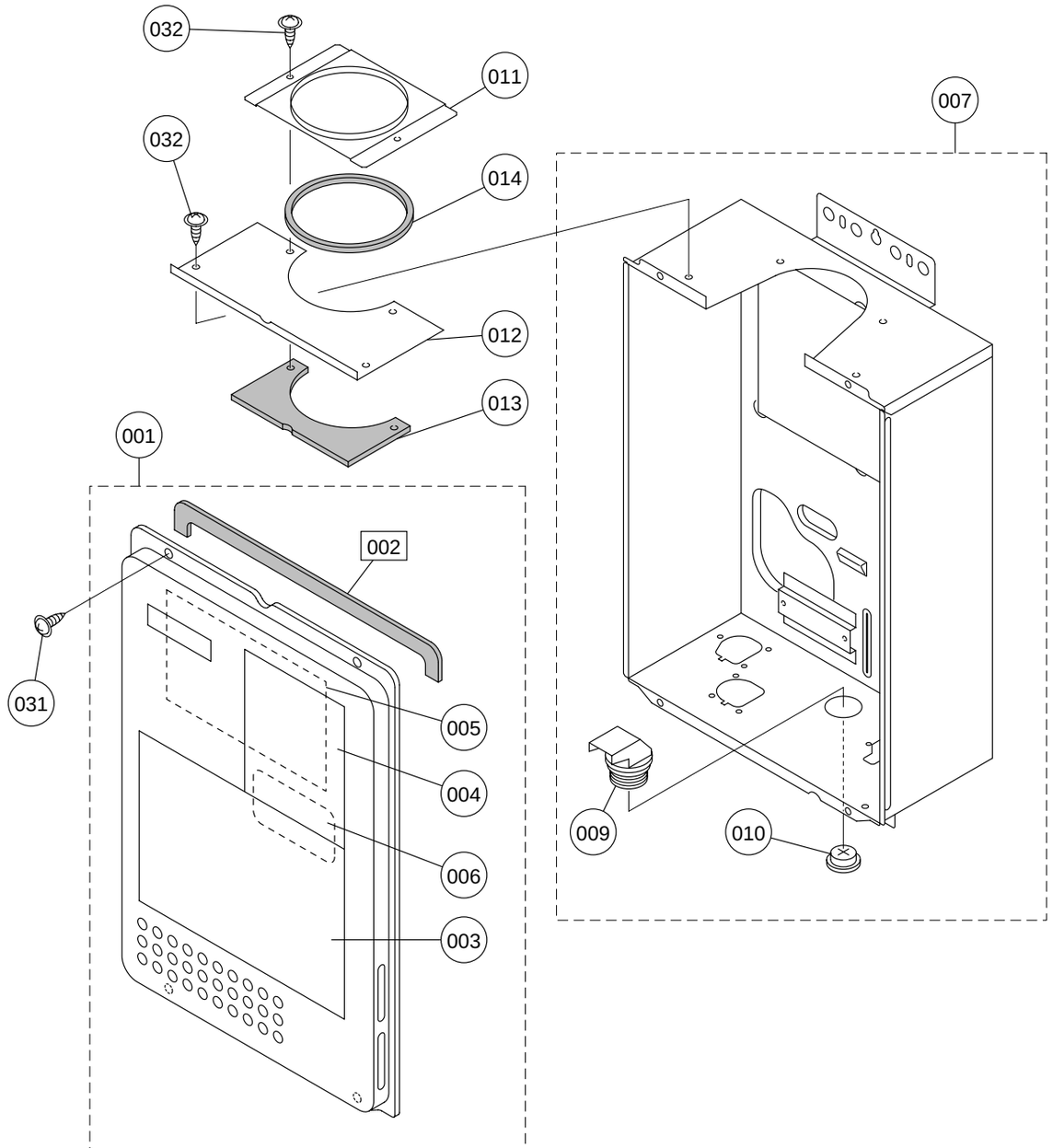

External outfitting

Part Nos.	Part Names	Order Nos.	Q'ty/unit
001	Front SET-AS	SBE7831	1
002	Short front packing BVU	BVUL002	1
003	Caution label 1 EAU	EAUK003	1
004	Caution label 2 EAU	EAUK004	1
005	Connection diagram label EDN	EDNK002	1
006	Plug insulating sheet DKE	DKEK001	1
007	Case SET EDL	EDLA001	1
009	Wiring coupling CZL	CZLA010	1
010	Grommet CXP	CXPA026	1
011	Case top cover-2 EDL	EDLA005	1
012	Case top cover-1 EDL	EDLA004	1
013	Case top packing EDL	EDLL001	1
014	Exhaust cylinder packing EDL	EDLL002	1
031	Cross recessed type 3 PW EVERTIGHT truss tapping screw 4X12		
032	Cross & Straight round-head collar/protrusion S TIGHT 4X8		

Combustion unit and gas route

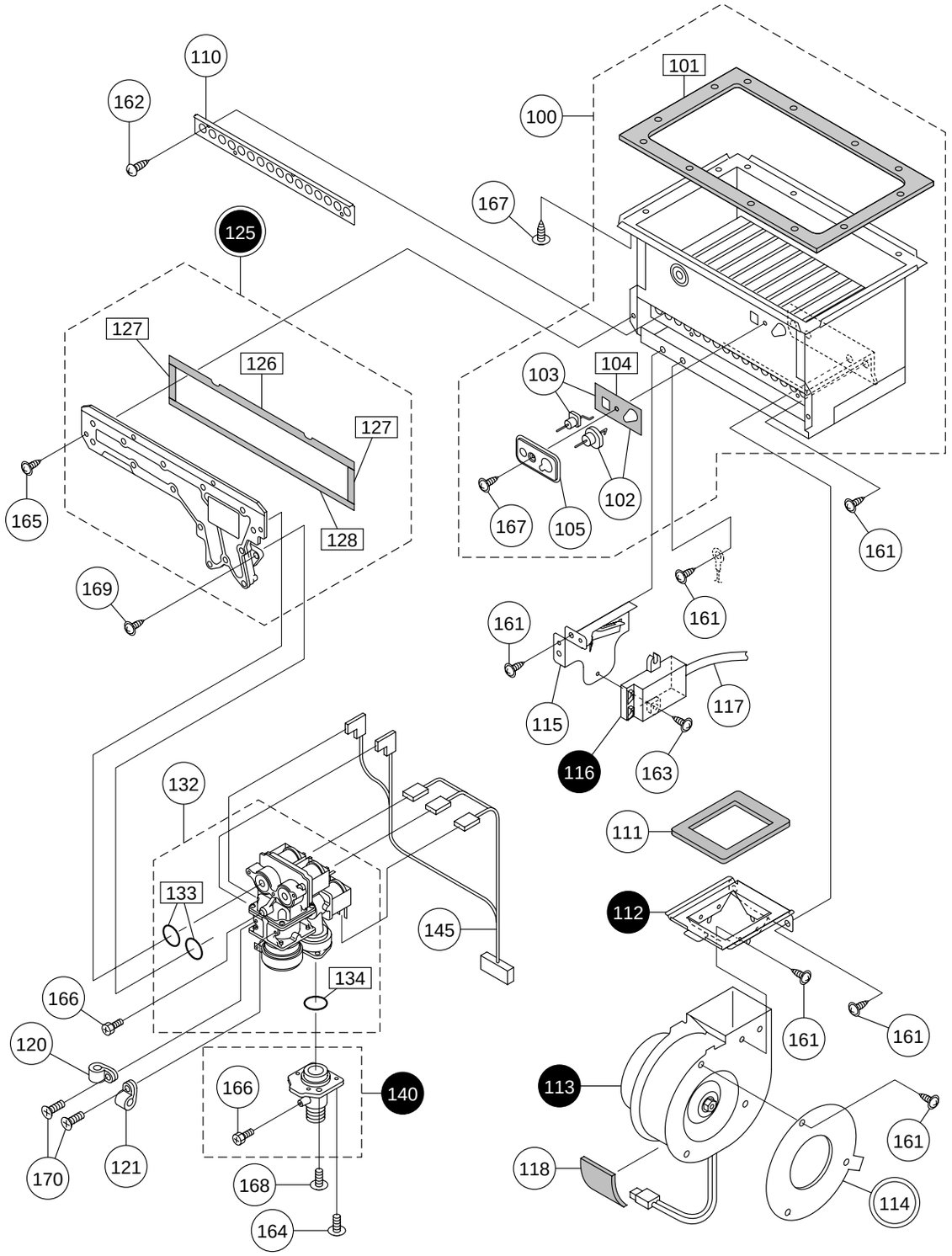

Combustion unit and gas route

Part Nos.	Part Names	Order Nos.	Q'ty/unit
100	Combustion tube SET DTJ	DTJC002	1
101	Suction air joint packing DTJ	DTJL001	1
102	Ignition plug CZL packing DLK SET-V	SBC7684	1
103	Flame rod DLK packing DLK SET-V	SBC7685	1
104	Plug packing (for B) DLK	SAB2715	1
105	Plug mounting plate (for B) DLK	DLKC029	1
110	Main damper 11 DTJ	DTJC041	1
111	Fan packing Q DTJ	DTJL004	1
112	Fan flange DTJ	DTJF035	1
113	Fan motor DTJ SET-AS	SBC7734	1
114	Bell-mouse ϕ40 DTJ	DTJF043	1
	Bell-mouse ϕ32 DTJ	DTJF047	1
115	Igniter mounting plate DTJ	DTJA015	1
116	Igniter CRP	CRPJ002	1
117	High-voltage cord L350 ALS	ALSJ079	1
118	Conduit guard packing DTJ	DTJL010	1
120	Nylon clamp HP-4N (NK-4N)	7287909	1
121	Nylon clamp HP-2N (NK-2N)	7144105	1
125	Manifold L16 DTJ SET-AS	SBC7686	1
	Manifold L22 DTJ SET-AS	SBC7687	1
126	Manifold seal packing top DTJ	DTJL005	1
127	Manifold seal packing side DTJ	DTJL007	2
128	Manifold seal packing bottom DTJ	DTJL006	1
132	Gas mech. S16D EDN SET-V	SBE7833	1
133	O-ring P18	2110903	2
134	O-ring P28	1648306	1
140	Gas fitting 15A SET EDN	EDNE001	1
145	Conduit R10 EDN	EDNJ005	1
161	Cross recessed round-head collar N-tapping screw 4X8		
162	Cross recessed round-head N-tapping screw 4X8		
163	Cross recessed round-head collar N-tapping screw 4X12		
164	Cross recessed PW truss machine screw M4X12		
165	Cross recessed round-head type 3 EVERTIGHT tapping screw 5X16		
166	Cross recessed hexagon head machine screw M4X8		
167	Cross recessed round-head collar N-tapping screw 4X10		
168	Cross recessed round-head machine screw M5X12		
169	Cross recessed round-head SPAK machine screw with guide M4X14		
170	Cross recessed truss machine screw M4X8		

Hot-water feed route

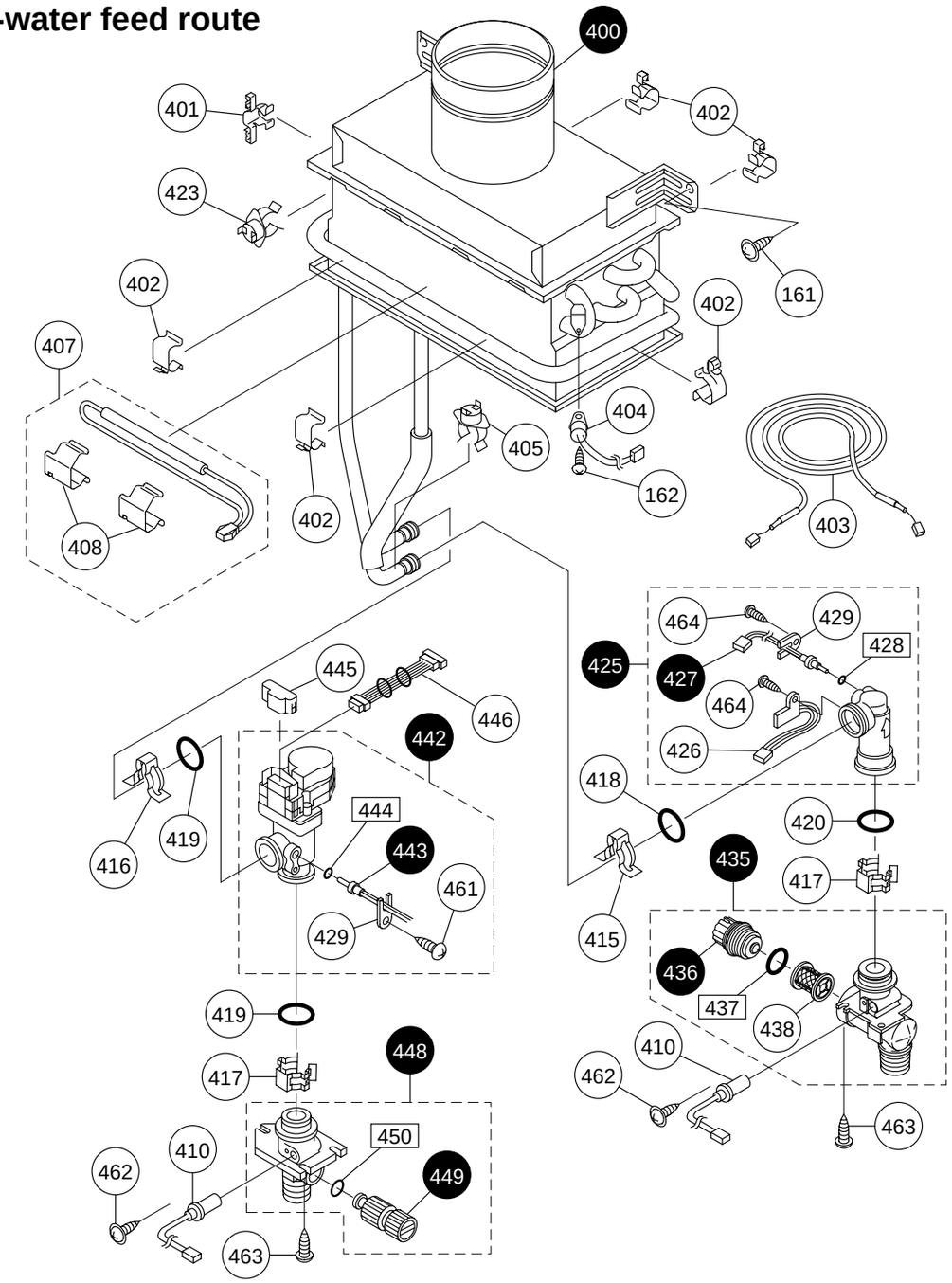

(Thermal fuse rounding procedure)

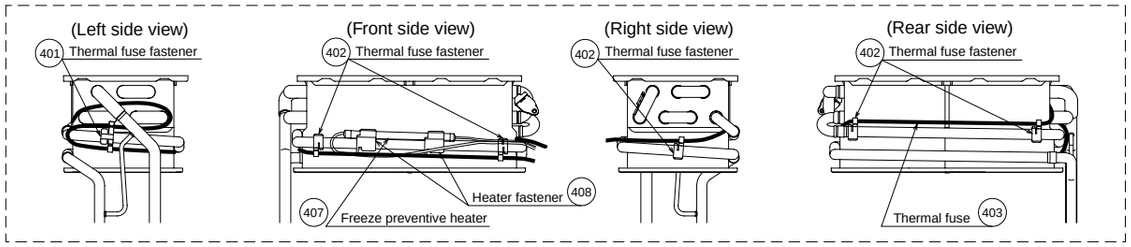

Hot-water feed route

Part Nos.	Part Names	Order Nos.	Q'ty/unit
400	Piping base collective trunk EDL SET-AS	SBE7832	1
401	Thermal fuse fastener CZL	CZLH005	1
402	Thermal fuse fastener DTJ	DTJH002	5
403	Thermal fuse Q DTJ SET-V	SBC7703	1
404	High limit-120 DJP	DJPH002	1
405	F-point thermostat SET DJP	DJPH003	1
407	Freeze preventive heater CRP SET-V	SAQ7745	1
408	Heater fastener CRP	CRPH004	2
410	Freeze preventive heater 3 BGD	BGDH002	2
415	Quick fastener (for 13-22)	SAD6537	1
416	Quick fastener (for 16-25)	SAD6593	1
417	Quick fastener 16A	6340300	2
418	O-ring P12.5	3359701	1
419	O-ring P16C	3223302	2
420	O-ring P16	2144905	1
423	F-point thermostat BVU	BVUH002	1
425	Water level sensor SET DDM	DDMD001	1
426	Magnetic sensor CXD	CXDD003	1
427	Water inlet thermostat-300 BWC	BWCD097	1
428	O-ring P4	2100908	1
429	Thermistor holding plate ALS	ALSD088	2
435	Water inlet fitting 20A SET EDN	EDND001	1
436	Water filter cover DTJ	DTJD006	1
437	O-ring 16DF BRQ	BRQL008	1
438	Water filter DTJ	DTJD005	1
442	Water level servo SET with close cock EBA	EBAD007	1
443	Hot-water outlet thermostat-300 BWC	BWCD096	1
444	O-ring P4C	1323709	1
445	Drip-proof cover CZL	CZLD041	1
446	Conduit 86 DTJ	DTJJ006	1
448	Hot-water outlet fitting 20A SET EDL	EDLD003	1
449	QMF safety valve A(S)	SAA2811	1
450	Hot-water resistant O-ring P9	SAD6635	1
461	Cross recessed round-head P TIGHT 4X14		
462	Cross & Straight recessed truss type 3 S TIGHT tapping screw 4X6		
463	Cross recessed round-head type 3 EVERTIGHT collar tapping screw 4X12		
464	Cross recessed truss P TIGHT 4X14		

Electronic control unit

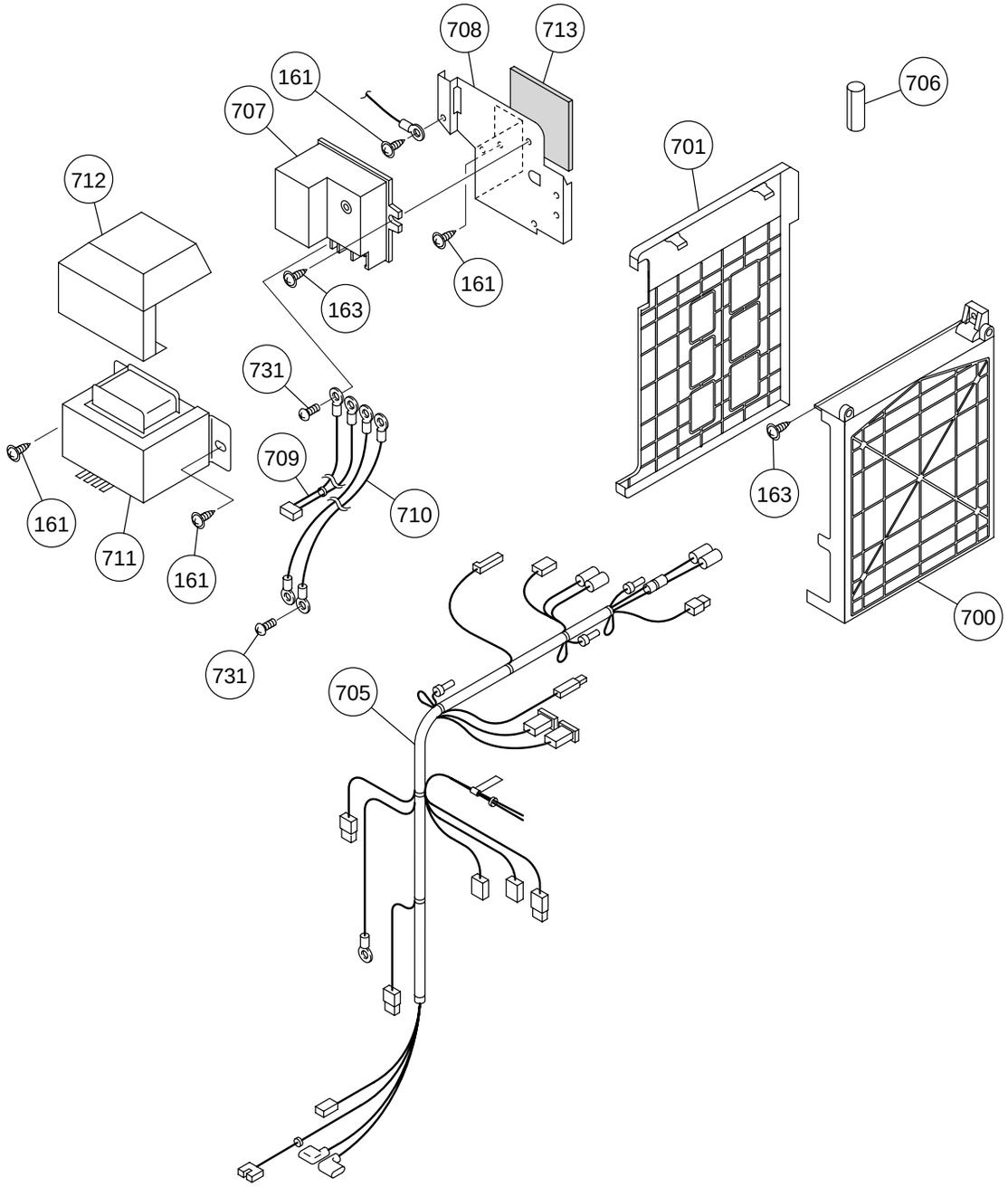

Electronic control unit

Part Nos.	Part Names	Order Nos.	Q'ty/unit
700	Relay case DTX-A SET-AS	SHA7456	1
701	Relay case cover DUC	DUCJ004	1
705	Harness 1 EDN	EDNJ002	1
706	Heat preventive packing DTJ	DTJL008	1
707	Short circuit safety device DJP	DJPJ031	1
708	Short circuit safety device mounting SET DTJ	DTJA017	1
709	Conduit 92-100V EAU	EAUJ017	1
710	Conduit M92-350 EDN	EDNJ007	1
711	Transformer EDN	EDNJ006	1
712	Transformer cover DJP	DJPA054	1
713	Drip-proof cover DTJ	DTJL009	1
731	Cross recessed bind machine screw M3.5X6		

Remote controller and attached set

Remote controller
Kitchen remote controller
(RC-7646M USA)

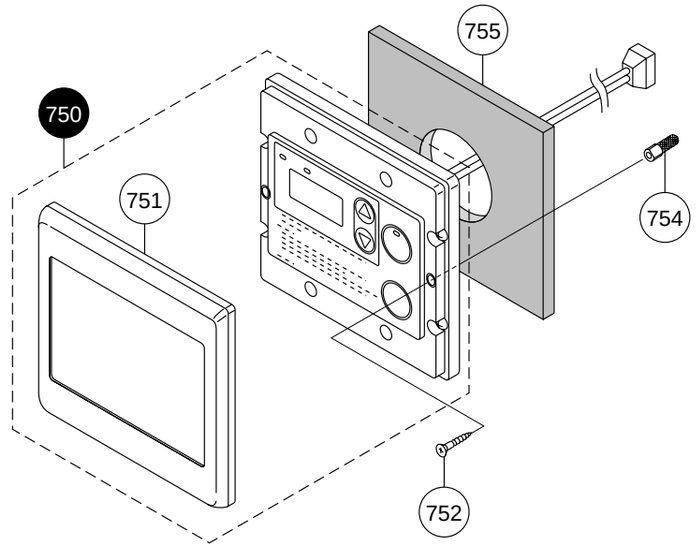

Attached set

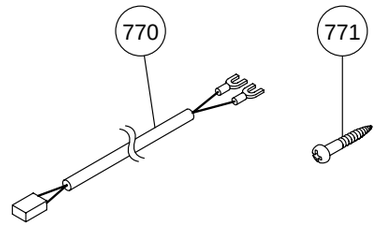

<Special part>

Special part	Special part no.
Instruction manual	888

Remote controller and attached set

Part Nos.	Part Names	Order Nos.	Q'ty/unit
750	RC-7646M body USA QME	QMEJ001	1
751	Remote controller dressed frame NR-AS QKS	QKSA031	1
752	Cross recessed round wood screw 4.1X25		
754	Oar plug 6X25		
755	Wall packing QHU	QHUA115	1
770	Remote controller cord S attachment SET EAU	EAUM001	1
771	Cross recessed round-head type 1 tapping screw 5X35		
800	GQ-2423WA-H USA packing P SET-V	SBE7834	1
888	Instruction manual GQ-2423WA-H America	SAQ8705	1

Installation Guide

NORITZ AMERICA CORPORATION

GAS WATER HEATER

N-063 (Indoor or Outdoor Installation)

WARNING: If the information in this manual is not followed exactly, a fire or explosion may result causing property damage, personal injury or death.

Injuries and damage due to accidents during installation are divided into the following categories. Closely observe indications of these three categories. It is critical to your safety.

⚠ Danger	Ignoring this indication may cause an immediate danger of death or serious injury due to incorrect handling of the water heater.
⚠ Warning	Ignoring this indication may result in death or serious injury due to incorrect handling of the water heater.
⚠ Caution	Ignoring this indication may result in serious injury or physical damage due to incorrect handling of the water heater.


General Prohibition


Pull out power plug


Be sure to ground


Be sure to do

Requests to installers

⚠ Caution
- In order to use the water heater safely, read this installation manual carefully, and follow the installation instructions.

- Failures and damage caused by erroneous work or work not as instructed in this manual are not covered by the warranty.
- Check that the installation was done properly in accordance with this Installation Guide upon completion of the installation work.
- Please put your information on the warranty card in the operation manual and give it to the customer when installation is completed.

Installation must conform with local codes, or in the absence of local codes, the National Fuel Gas Code, ANSI Z223.1/NFPA 54.

1.Included accessories

The accessories listed below are contained in the package. Check these accessories before installation.

Part name	Shape	Q'ty	Part name	Shape	Q'ty
Tapping screw ϕ5 x 35		5	Operation Manual (with a warranty)/ Installation Manual		1
Remote controller (see page 48)		1			

2.Before installation

⚠Caution

Check the gas

- Check that the kind of gas indicated on the label, and that used for the equipment are compatible.

Check the power

- The power supply is 120V AC, and 60Hz. Using a different voltage may cause a fire or electric shock.

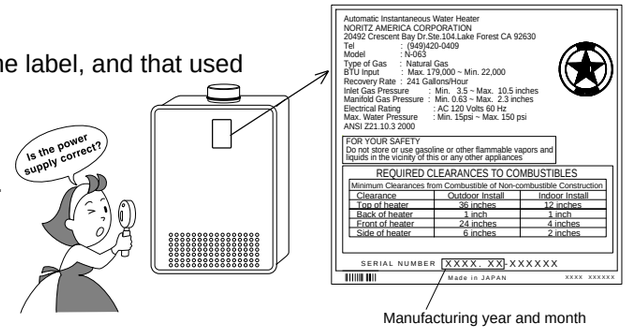

Do not use equipment for purposes other than those specified

- Use the gas water heater only for hot water supply or showers, otherwise it may cause unexpected accidents or failure of the equipment.

Check Ground water and well water

- Check the quality of water thoroughly if it is necessary to use ground water or well water. The equipment may corrode depending on the quality.

Do not connect to solar water heaters

- Do not connect the water heater to solar water heaters. When the water temperature rises in summer, it becomes uncontrollable. If water is supplied at extremely high temperature, it may cause burns or failure of the equipment.

* If desired use a water mixing valve to keep the temperature down and present burns.

Replacement

* Check the fixing brackets and exhaust vent yearly to make sure they do not to be replaced. Do not install it outside or in a bathroom or other occupied room Installation in an improper location may cause failures or fire.

3.Choosing installation site

* Locate the appliance in an area where leakage from the unit or connections will not result in damage to the area adjacent to the appliance or to the lower floors of the structure. When such locations cannot be avoided, it is recommended that a suitable drain pan, adequately drained, be installed under the appliance. The pan must not restrict combustion air flow.

⚠Caution

- Install the water heater in a location where it is free from obstacles around the equipment and air is not stagnant in order to prevent incomplete combustion.
- Do not install the water heater near staircases or emergency exit.

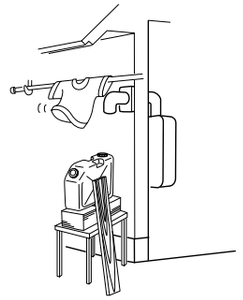

- Avoid places where fires are common, such as those where gasoline, benzene and adhesives are handled, or places in which corrosive gases (ammonia, chlorine, sulfur, ethylene compounds, acids) are present.
  Installation in an improper location may cause failures or fires.
- Install the exhaust vent so that obstacles will not be placed around the end of the pipe, and exhaust gas will not stagnate.
- Do not install the water heater where the exhaust gas blows on outer walls or material not resistant to heat. Also consider the surrounding trees and animals.
  The heat and moisture from the water heater may cause discoloration of walls and resinous materials, or corrosion of aluminum materials.

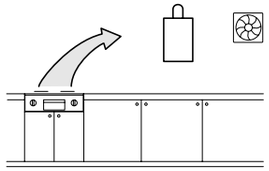

- Avoid installation above gas ranges or stoves.
- Avoid installation between the kitchen fan and stove. If oily fumes or a large amount of steam occur in the installation location, take measures to prevent the fumes and steam from entering in the equipment.

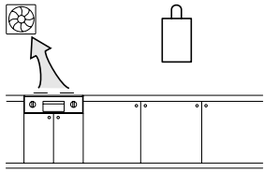

- Avoid installation in dusty places where sand or dust accumulate.
  These environments will decrease the performance of the fan, causing incomplete combustion.
- Determine a location of installation where the flow of exhaust gas is not affected by the outlet of the fan or range hood.
- Take care that noise and exhaust gas will not affect neighbors.
- Make sure that the location allows installation of the exhaust vent as specified.

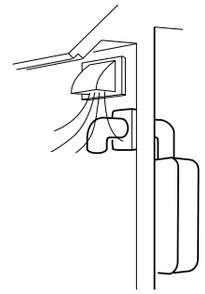

- Avoid installation at places where special chemical agents (e.g., hair spray or spray detergent) are used.
  This may cause incomplete connections or failures.

4.Installation clearances ⚠Caution

Before starting installation, check the following

Install is accordance with relevant building and mechanical codes ,as well as any local state or national regulation.

Item	Confirmation	Schematic illustration
Required clearances from combustible	● Place the equipment away from flammable materials and noncombustible materials (including parts of a building finished with these materials) as shown in the right column.	(unit: inch) Min: 3" Min: 2" Distance from the side wall Min: 0.4" Distance from the rear wall
Suggested clearance	<Indoor Installation> ● It is convenient to leave 8 inches or more distance at both sides for inspection. ● Leave 24 inches or more space in front so as to facilitate inspection and repair of the equipment.	(unit: inch) Min: 3" Min: 3" 8" or more 8" or more 24" or more
	<Outdoor Installation> ● For outdoor installation, locate the unit so that the vent is 4 feets below 4 feets horizontally from or 1 feet above any door, window or gravity inlet into any building or 3 feets above any forced air inlet.	(unit: inch) Min:3' To Overhang Min: 4' To any opening Min: 3' For forced air opening Min:4' To any opening Door

Item	Confirmation	Schematic illustration
Clearance from cooking equipment	● Leave sufficient distance when installing the water heater around permanent gas cooking equipment which can produce steam containing oily smoke. Oils and fats may enter the equipment through the air inlet, and cause fires. To prevent this, use the method shown to the right.	<An example of efficient placement to prevent oils and fats entering in the water heater> Exhaust hood Dividing plate Water heater Range * The dividing plate should be of noncombustible material of a width greater than the water heater.

⚠WARNING In the USA, do not install the heater with the vent within 4 feet of any opening into a building. In Canada, do not install the heater with the top of the vent assembly within 10 feet any opening into a building.

5. Installation

Securing to the wall

Installation must conform with local codes, or in the absence of local codes, the National Fuel Gas Code, ANSI Z223.1/NFPA 54. A heavy load will be applied to the wall on which the water heater is mounted. If the strength of the wall is not sufficient, reinforcement will be necessary.

- Take care not to drop the water heater, or otherwise damage it.
  The internal parts can be damaged and cause a danger of accident.
- Be sure to mount the water heater on an upright wall.

Item	Work	Schematic illustration
Location of screw hole	**Note** Be careful of injuries when you need to work with bare hands. Be careful of electric wiring, and gas and water piping inside the house while drilling holes. 1. Drill holes for tapping screws, secure the tapping screws temporarily on the wall, and hang the mounting board (upper side) on the tapping screws. 2. Determine the screw positions (two at the top and bottom respectively), and take off the equipment.	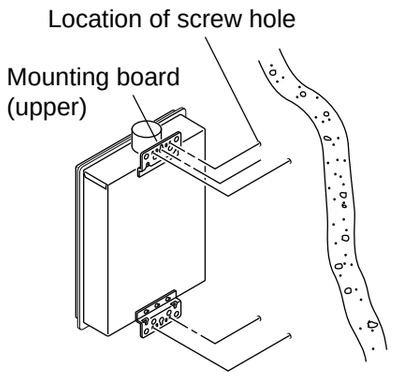
Mounting	3. Drill holes at the screw positions on the wall. 4. Hang the equipment again on the tapping screws secured temporarily, and tighten the tapping screws (two at the upper and lower sides respectively).	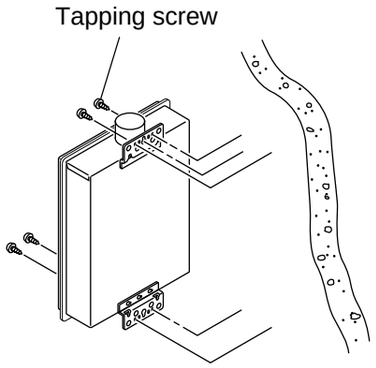
Water heater and building structure	● Install the water heater firmly so it will not turn over, get damaged or broken due to the shocks of earthquakes or vibrations.	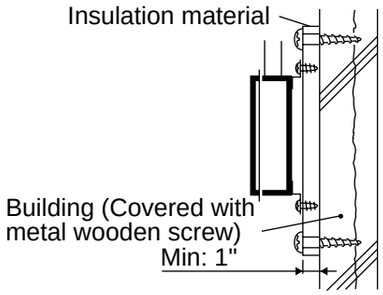

6. Exhaust piping installation

■ Reference to installation

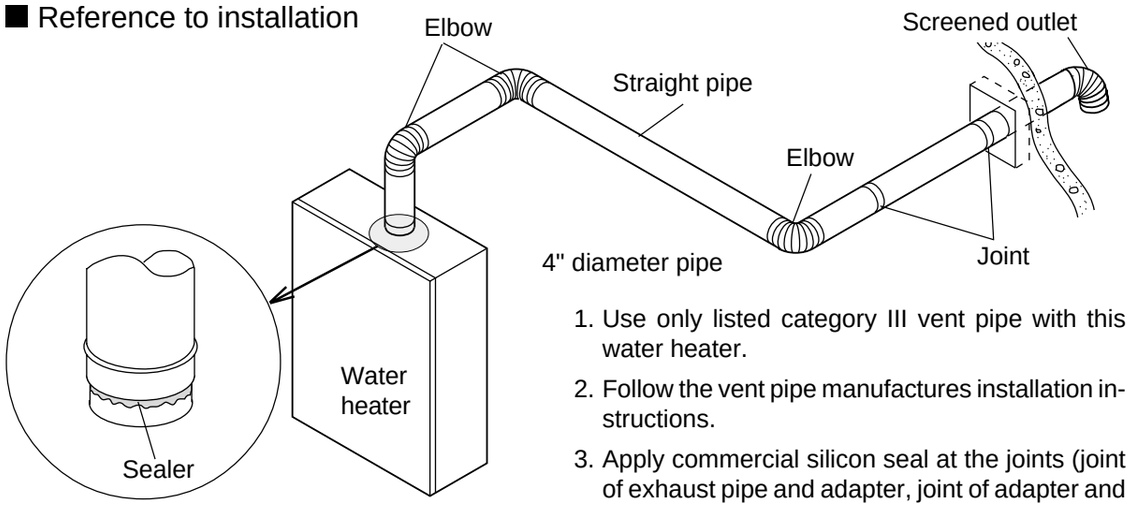

* See below for max. vent length.

1. Use only listed category III vent pipe with this water heater.
2. Follow the vent pipe manufactures installation instructions.
3. Apply commercial silicon seal at the joints (joint of exhaust pipe and adapter, joint of adapter and exhaust pipe).

■ Installation of exhaust vent and end of pipe

Discharge the exhaust gas outside using the extension sold separately.

■ Preparation before installation

- Exhaust pipe diameter and limit length

Pipe diameter	4"
Limit of exhaust vent length	15 feets with 3 bends (Except the end of pipe)

(A bend is equivalent to 12 feets straight pipe.)

- Check that the length from the installation location of the water heater to the end of vent is within the specified maximum distance.

* If this limit is exceeded, explosion may occur.

- Be sure the vent pipe directs exhaust to the outside of the building.
- Avoid firewalls when determining the route for installing the exhaust pipe.
- Do not mount a fireproof damper on the exhaust pipe.

* The shortest vent length is 1 meter with a bend.
(The end of exhaust pipe is not included as a bend.)

Avoid the installation shown in the illustration on the right

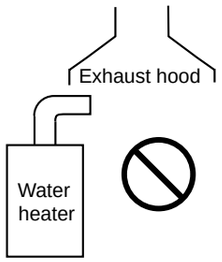

- Make the vertical section at the exhaust vent as short as possible.
- Maintain the same vent pipe diameter all the way to the end.
- Use only listed category III vent materials.
- Make sure vent pipe is gas tight and will not leak.
- Do not place any dangerous objects at the end of the exhaust vent.
- Steam (smoke) or water drops may come out from the end of the exhaust pipe. Select the location for the end of the vent so that steam is not visible, and the vent is not wet with dripping water.
- If snow is expected to accumulate, take care the end of the pipe is not covered with snow or hit by falling lumps of snow.

■ Air inlet

Observe the commercial gas equipment installation criteria and operation criteria.

- Size the air inlet according to the National Fuel Gas Code, ANSI Z223.1.
  On the left side it says : Area of Air Inlet and 100 square inches or more.
- Be sure to provide an air inlet.
- The air inlet needs to open to the outside air from the room in which the water heater is used.

To install the water heater in a kitchen or a room with a duct, a volume of air intake equivalent to the volume of air going out through the duct is needed, so as not to reduce the air pressure in the room.
(When air pressure in the room is reduced, the safety device on the water heater activates and stops the heater operating.)

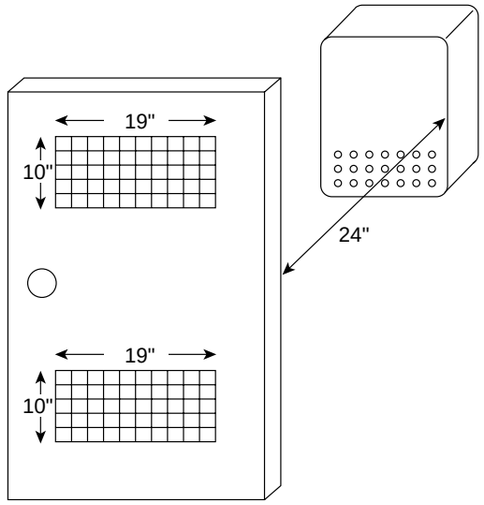

7.Gas piping

Follow the instructions from the utility.

The appliance and its individual shutoff valve must be disconnected from the gas supply piping system during any pressure testing of that system at test pressures in excess of ½ psig (3.5 kPa).
The Appliance must be isolated from the gas supply piping system by closing its individual manual shutoff valve during any pressure testing of the gas supply piping system at test pressures equal to or less than ½ psig (3.5 kPa).

The appliance and its gas connections must be leak tested before placing the appliance in operation.

1. Turn on gas supply.
2. Spray a 10:1 dishwater soap and water solution around all gas connections, and look for bubbles. If bubble is present, disassemble and apply a liberal amount of sealant.

The inlet gas pressure must be within the range specified. This is for the purposes of input adjustment.

In order to choose the proper size for the gas line, consult local codes or the National Fuel Gas Code ANSI Z223.1.

■ Gas valve

If gas is not available in the area where the equipment is to be installed, or if the line is not sized correctly, the gas line will need to be reworked for this water heater.

■ Gas pressure

Select gas piping with the appropriate diameter and a proper gas meter in order to achieve sufficient gas pressure at the inlet of the water heater during maximum burning.

Natural Gas Pressure inlet
Min. 3.5" WC
Max. 10.5" WC

LP Gas Pressure inlet
Min. 8" WC
Max. 14" WC

■ Gas connection

- Do not use piping with a diameter smaller than the inlet diameter of the water heater.
- After connecting the piping, check for gas leakage at the inlet.
- Install a gas shutoff valve on the supply line.
- Use approved gas piping materials.
- Use removable connections or hex pipe.

■ Gas meter

Select a gas meter capable of supplying gas for the water heater while also supplying gas to other gas equipment.

8. Supply water and hot water piping

Ask a qualified plumber in the region for piping and observe plumbing codes.

This appliance suitable for potable water and space heating applications. Do not use this appliance if any part has been underwater. Immediately call a qualified service technician to inspect the appliance and to replace any part of the control system and gas control which has been under water.

If the water heater is installed in a closed water supply system, such as one having a backflow preventer in the cold water supply line, means shall be provided to control thermal expansion. Contact the water supplier or a local plumbing inspector on how to control this situation.

A pressure relief valve must be installed near the hot water outlet that is rated in accordance with and complying with either The Standard for Relief Valves and Automatic Shutoff Devices for Hot Water Supply Systems, ANSI Z21.22, or The ANSI/ASME Boiler and Pressure Vessel Code, Section IV ("Heating Boilers"). This pressure relief valve must be capable of an hourly Btu rated temperature steam discharge of 399,000 Btuh. Multiple valves may be used. The pressure relief capacity must not exceed 150 psig. No valve shall be placed between the relief valve and the water heater. The relief valve must be installed such that the discharge will be conducted to a suitable place for disposal when relief occurs. No reducing coupling or other restriction may be installed in the discharge line. The discharge line must be installed to allow complete drainage of both the valve and the line. If this unit is installed with a separate storage vessel, the separate vessel must have its own temperature and pressure relief valve. This valve must also comply with The Standard for Relief Valves and Automatic Gas Shutoff Devices for Hot Water Supply Systems, ANSI Z21.22. (in the U.S. only). A temperature relief valve is not required, but if one is used, do not install the valve with the probe directly in the flow of water. This may cause unwarranted discharge of the valve.

Piping and components connected to the water heater shall be suitable for use with potable water. Toxic chemicals, such as those used for boiler treatment, shall not be introduced into the potable water. A water heater used to supply potable water may not be connected to any heating system or components previously used with a nonpotable water heating appliance.
When water is required in one part of the system at a higher temperature than in the rest of the system, means such as a mixing valve shall be installed to temper the water to reduce the scald hazard.

- Pass water through the pipe to clean out metal powder, sand and dust before connecting it.
- Take appropriate heat insulation measures (e.g., wrapping with heat insulation materials, using electric heaters) according to the climate of the region to prevent the pipe from freezing.
- Use a union coupling or flexible pipe for connecting the pipes to reduce the force applied to the piping.
- Do not use piping with a diameter smaller than the coupling.
- When feed water pressure is too high, insert a depressurizing valve, or take water hammer prevention measure.
- Avoid using joints as much as possible to keep the piping simple.
- Avoid piping in which an air holdup can occur.

* Use approved piping materials.

■ Supply water piping

- Do not use PVC piping with city water.
- Mount a check valve and a shut off valve (near the inlet).
- In order for the client to use the water heater comfortably, 98.1 to 491 kPa (14 to 70 PSI) of pressure is needed for water feeding.
  Be sure to check the water pressure. If the water pressure is low, the water heater cannot perform to its full capability, and may become a source of trouble for the client.

■ Drain piping

- Expansion water may drop from the pressure prevention device and wet the floor. If necessary, provide drain piping or use a drain hose to remove the water.

■ Hot water piping

- Do not use lead or PVC piping with city water.
- The longer the piping, the greater the heat loss. Try to make the piping as short as possible.
- Use a mixing valve with a low water resistance. Use a shower head with low pressure loss.
- If necessary, use a pump or other means to ensure that the supply water pressure to the inlet of the heater does not fall below 200 kPa when the maximum amount of water is being demanded. Also install a pressure meter on the inlet. If this is not done, local boiling will occur inside the water heater causing abnormal sounds and decreasing the durability of the heat exchanger.

9. Electric wiring

Consult qualified electrician for the electrical work.

This appliance must be electrically grounded in accordance with local codes, or in the absence of local codes, with the National Electrical Code, ANSI/NFPA 70. In Canada, the latest CSA C22.1 Electrical Code.

Caution: Label all wires prior to disconnection when servicing controls. Wiring errors can cause improper and dangerous operation.

Verify proper operation after servicing.

Field wiring to be performed at time of appliance installation.

⚠ Caution Do not turn on the power until the electrical wiring is finished. Otherwise, electric shocks or damage to the equipment will occur.

- The power for the water heater is at 120V AC and 60Hz.
  Check the power consumption indicated on the label, and use an appropriate circuit.
- Do not do connect the power supply when not in use. When the power is off, the freeze prevention heater in the water heater will not activate, resulting possible damage from freezing.

- Do not let the power cord contact the gas piping.

Tie the redundant power cord outside the water heater. Do not put the extra length in the equipment. It may cause a fault in the water heater.

■ Ground

- To prevent an electric shock, provide a ground with resistance less than 100Ω. An electrical engineer should do the work.
- The ground terminal is provided at the bottom of the water heater and explicitly indicated.

Do not connect the ground to the city water or gas piping. Do not tie the ground to a telephone line.

■ Installation of breaker

- Mount a device which shuts off the electrical path automatically (leakage breaker) when leakage from electric facilities is detected (based on technical criteria).

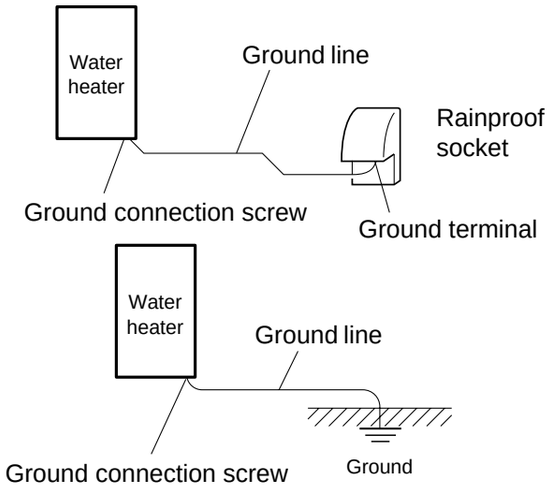

Maintenance

The venting system must be examined periodically by a qualified service technician to check for any leaks or corrosion.
The burner flame must be checked periodically for a proper blue color and consistency.
If the flame does not appear normal, the burner may need to be cleaned.
If the burner needs to be cleaned, it must be performed by a qualified service technician.
Do not obstruct the flow of combustion and ventilation air.
The pressure relief valve must be operated once a year to ensure that it is functioning properly and there is no obstruction. Turn the power off to the unit before opening the relief valve, and make sure that water draining out of the valve will not cause any damage.
If the relief valve discharges periodically, it may be due to thermal expansion in a closed water system. Contact the water supplier or a local plumbing inspector on how to correct this situation. Do not plug the relief valve. See Operation Manual for further maintenance.
Warning: There is a scald potential if the output temperature is set too high.
Should overheating occur, or the gas supply fail to shut off, turn off the manual gas control valve to the appliance.
Do not use this appliance if any part has been under water. Immediately call a qualified service technician to inspect the appliance and to replace any part of the control system and any gas control which has been under water.

■ Installation of remote controller

● Applicable remote controller

		N-063
Remote controller	Main	RC-7646M

Install the remote controller according to the instructions in the Installation Guide (p.53 through p.55).

■ Connection of remote controller cord and water heater

* Keep the remote controller cord away from the freeze prevention heater in the water heater.
* Tie the redundant cord outside the water heater. Do not put the extra length inside the equipment.
* Keep the remote controller cord length below 100 meters.
* Use a Y type terminal with a resin sleeve. (Without the sleeve, faults may be caused by the corrosion of the copper wire).

1. Confirm the remote controller cord is long enough to stay connected if the water heater is pulled out from the wall.
2. Remove the front cover of the heater (4 screws).
3. Lead the remote controller cord into the equipment heater through the power connection inlet.
4. Connect the Y terminal at the end of the remote controller cord to the terminal block.
5. Secure the remote controller cord with a clamp.
6. Replace the front cover.

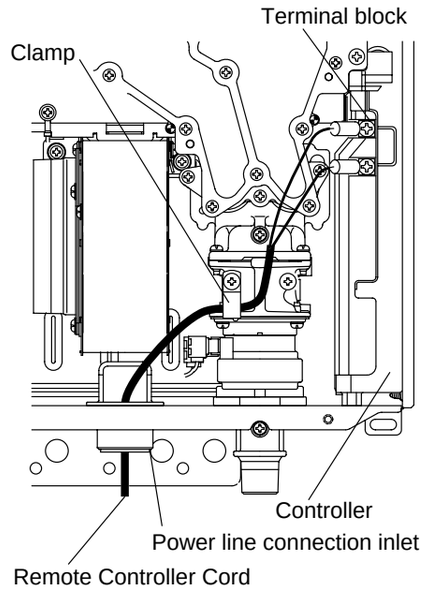

If the cord is too long to put into the inlet, remove the bushing.

Should overheating occur, or the gas supply fail to shut off, turn off the manual control valve to the appliance.

10. Trial operation

After installation, test the equipment to confirm the water heater works properly.

● Preparation ····· (1) Open the shut off valve on the water supply, check that water passes through the valve and close the valve.
(2) Open the gas supply valve, turn on the power supply, and turn on the Operation switch on the remote controller (the Operation lamp turns on).

(1) Open the hot water supply valve, and check that the combustion indicator comes on, and that hot water is provided. (If necessary, repeat until the air in the gas piping is bled out).
* If error "11" is indicated, turn the Operation switch off and turn it on again, and open the hot water plug once more.

(2) Adjust the temperature setting on the remote control and confirm that the water temperature changes.

● If the water heater does not operate normally, refer to "Troubleshooting" in the Operation Manual.
* After the trial operation, clean the filter on the inlet.

⚠ Caution

■ Handling after trial operation

● Drain the water for freeze prevention, and close the gas valve and water supply valve.
Make sure to drain the water, unless the unit will be used immediately. This is to prevent the water from freezing and the water heater from being damaged. Follow the instructions in the Owner's Manual.
(Freezing is not covered by the warranty.)

Lighting Instructions

This water heater does not have a pilot. It is equipped with an ignition device that automatically lights the burner.
Do not try to light the burner by hand.

1. Read the safety information in the installation manual or on the front of the water heater.
2. Turn off all electrical power to the unit.
3. Do not attempt to light the burner by hand.
4. Turn the gas control manual valve (external to the unit) clockwise to the on position.
5. Wait five minutes to clear out any gas. If the smell of gas remains, stop, and follow the instructions on page 2 of this manual.
6. Turn the gas control manual valve counterclockwise to the on position.
7. Turn on electric power to the unit.
8. The unit will now operate whenever hot water is called for. If the unit will not operate, follow the shutdown instructions and call a service technician.

Shutdown Instructions

1. Stop any water demand.
2. Turn off electric power.
3. Turn the gas control manual valve clockwise to the off position.

Dimensional outline drawing

■ N-063 (unit: inch)

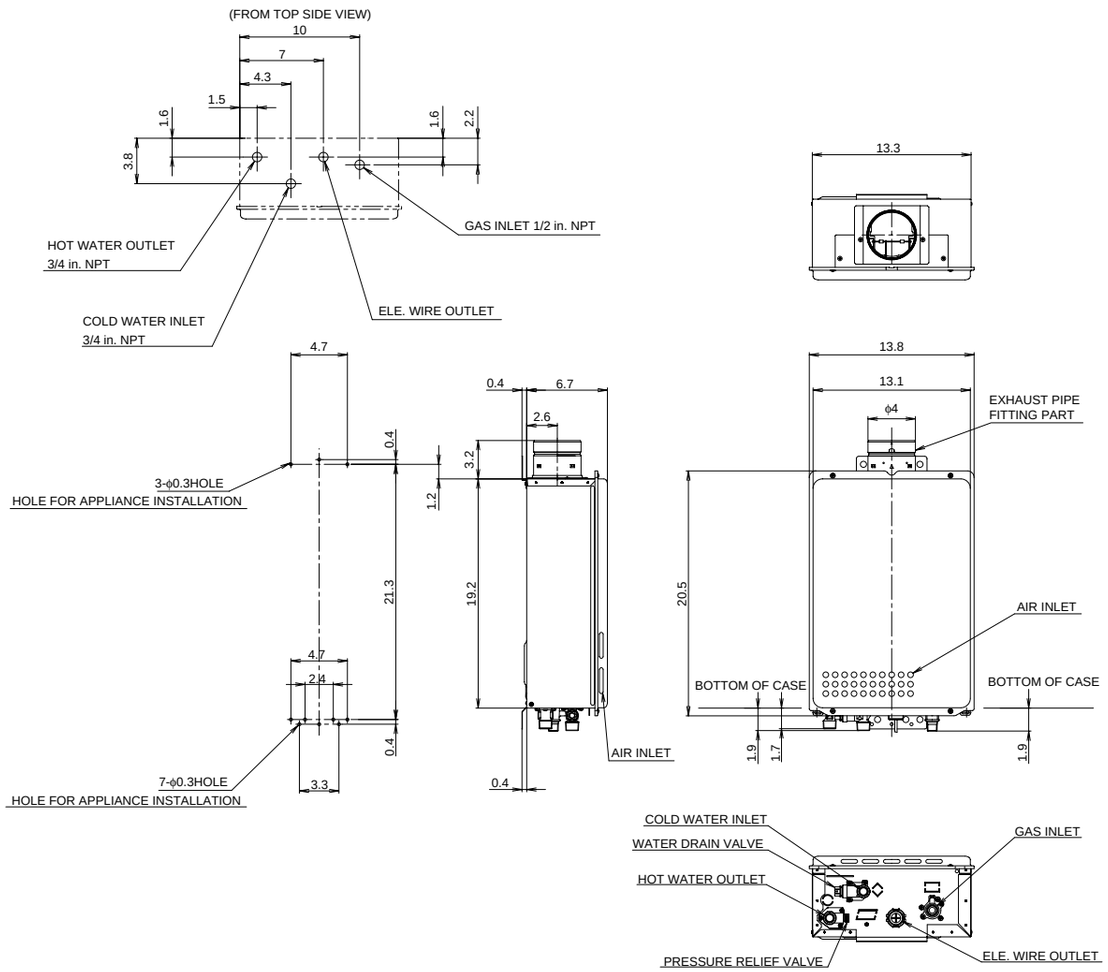

WIRING DIAGRAM (MODEL : N-063/N-042)

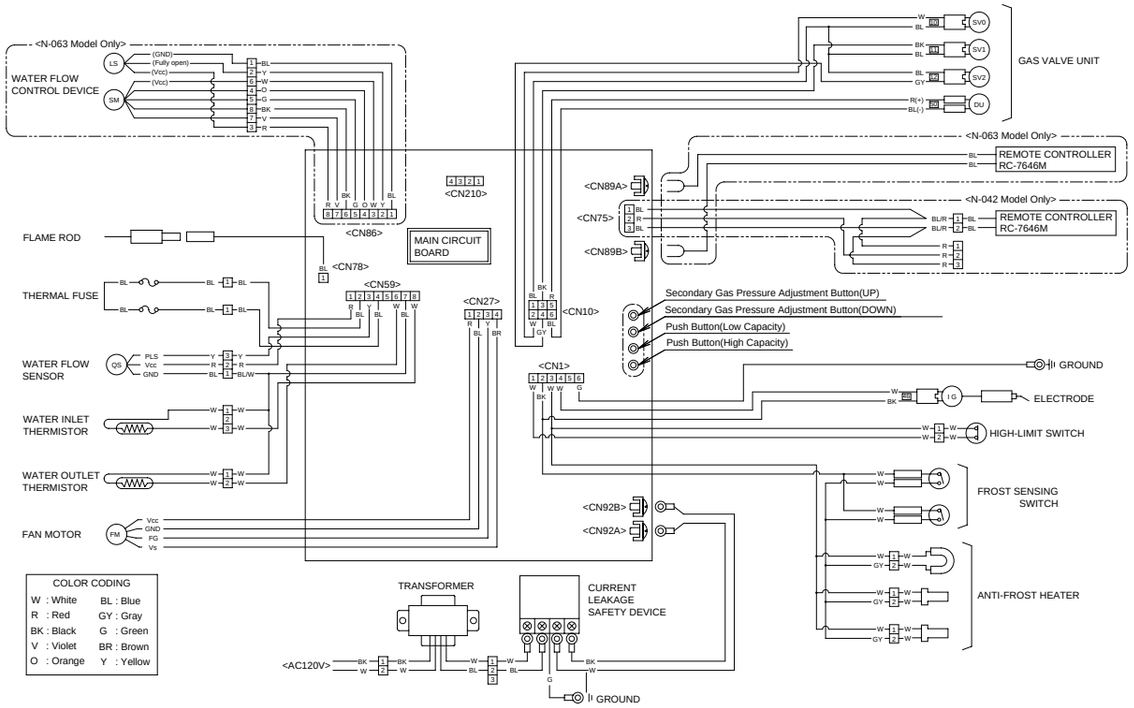

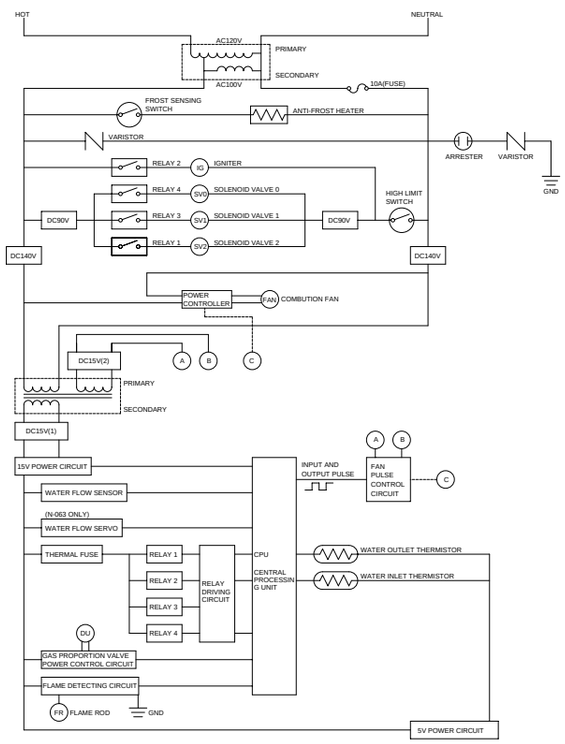

Remote Controller RC-7646M

Installation Guide

NORITZ AMERICA CORPORATION

■ Request to Constructors

Read this installation guide carefully before carrying out the construction specified.

Note

Do not insert the power plug of the water heater into the outlet until the installation of the remote controller is completed.

■ Supplied Parts List

Part Name	Quantity
Remote controller	1
Wall packing	1
Phillips roundhead wood screw	2
Wall plug	2

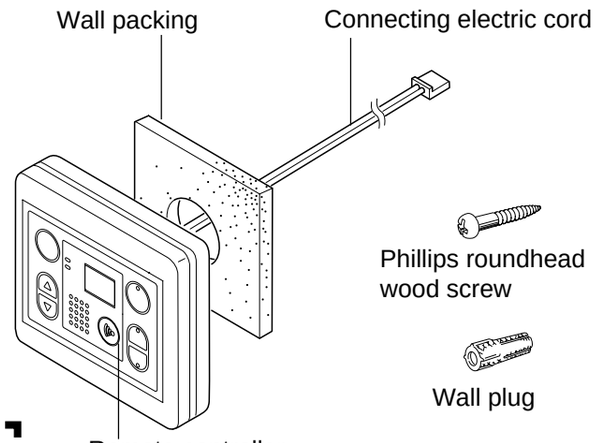

Do not disassemble the remote controller.

■ Notes on the place of installation

- The remote controller can be installed at a convenient place in the bathroom, because it is waterproofed and of a low-voltage design, but should avoid the place where water may splash on the controller.
- Avoid the place where special chemical agents (e.g., benzine, fatty and oily detergents) are used.
- Avoid outdoor installation, and an indoor place where the remote controller is exposed in direct sunlight.

■ Confirmation of remote controller cord

2P connector → Remote controller side

Y-shaped terminal (two-core) → Water heater side

✻ Confirm the connection with the labels at the both ends of the remote controller cord.

- The following remote controller cords are provided for the selection of a necessary length of cord according to the installation condition:

  3A (3m), 5A (5m), 8A (8m), 10A (10m), 15A (15m), 20A (20m), 50A (50m)

■ For in-wall wiring

1. Put the remote controller cord through the wall from the bathroom. Be sure to place the 2P connector at the room side.

Ordinary bathroom and shower room

Unit bath and shower unit

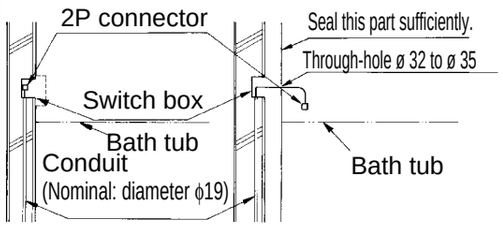

Use the JIS-C83361 switch box for individual use at the remote controller side.

✻ A back support board illustrated below is needed to install the remote controller on the wall panel of the unit bath.
[Install the back support board at the rear side of the wall panel prior to installation.]

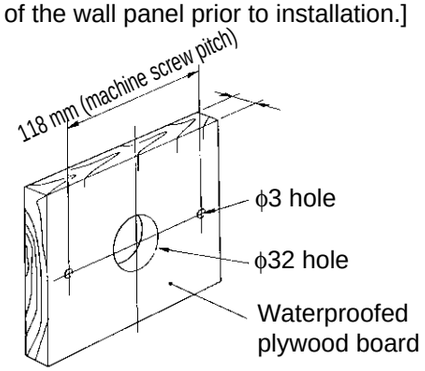

Dimensions of back support board (reference)

2. Drill two holes (6, 25 to 30 mm deep) on the wall to secure the remote controller case, and embed the wall plugs into the holes.

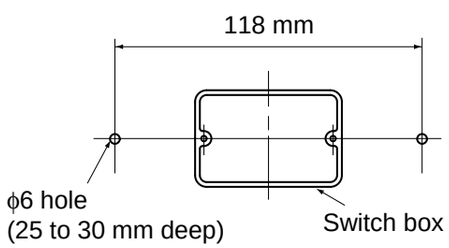

3. Take off the decorative frame from the remote controller.

4. Apply the wall packing to the rear side of the remote controller.

5. Connect the connector.

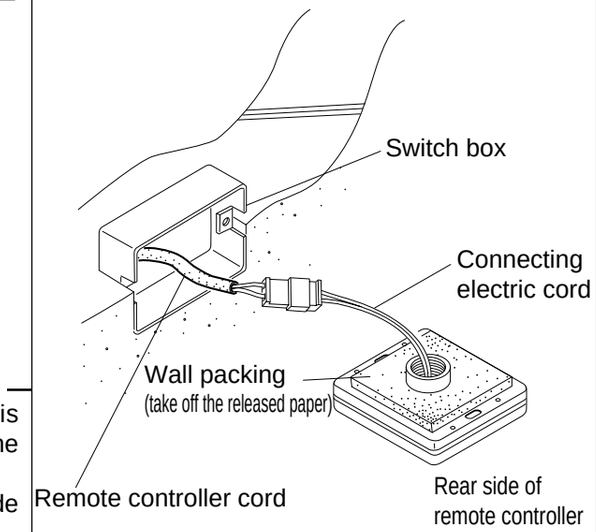

6. Secure the remote controller with two Phillips roundhead wood screws.

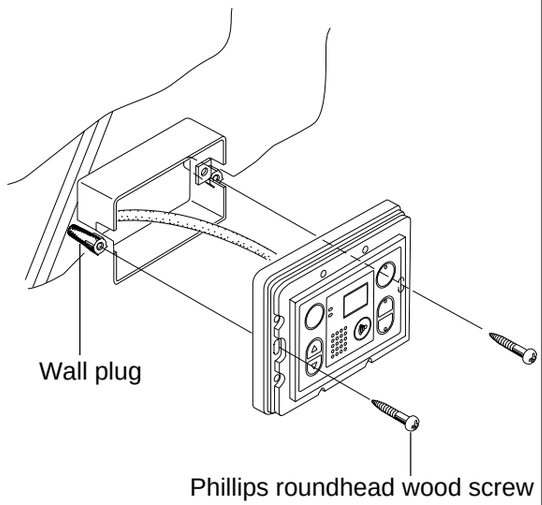

7. Fit the decorative frame on the remote controller.

■ Installing the Remote Controller

■ For outdoor wiring ····· Note) An outdoor cover set for bathroom (separately sold) is required. [Phillips roundhead wood screws and wall plugs are not necessary for outdoor wiring.]

1. Insert the connecting electric cord into the stay pipe, and secure the stay pipe firmly into the remote controller. Then put the wall packing into the stay pipe and attach it on the rear side of the remote controller.

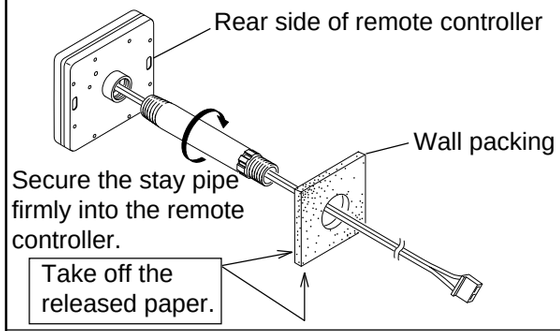

2. Drill a ϕ32 mm hole on the wall.

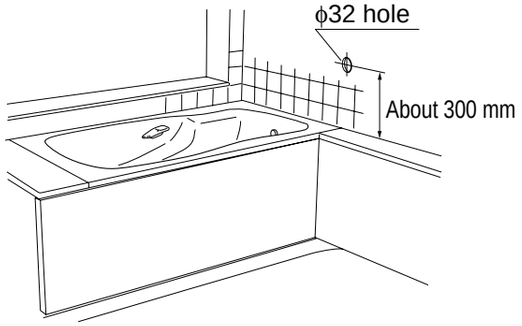

3. Insert the stay pipe containing the connecting electric cord into the hole on the wall.

4. Fit the slip preventive packing and outdoor cover onto the connecting electric cord protruding from the outside wall.

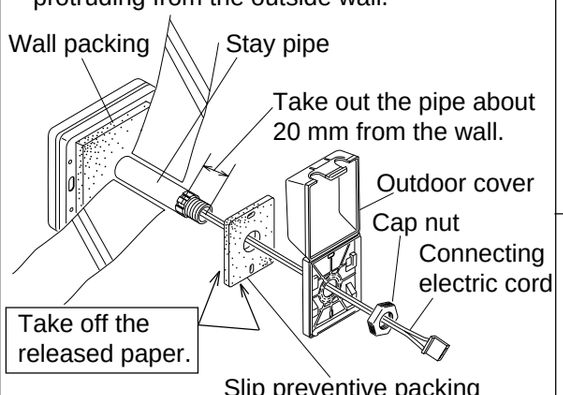

5. Put through the cap nut on the connecting cord, and screw the cap nut onto the stay pipe.

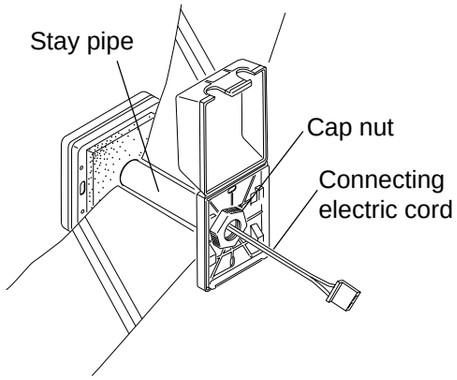

6. Connect the connector in the outdoor cover. Wind the redundant length of the connecting cord on the hook shown in the illustration below.

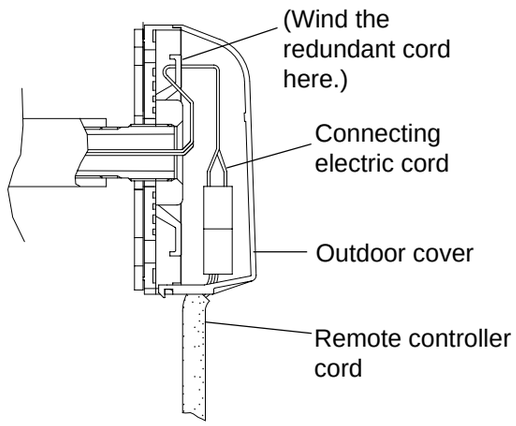

Tie the redundant length of the remote controller cord outside the outdoor cover.

7. Close the outdoor cover.

Automatic Instantaneous Water Heater
NORITZ AMERICA CORPORATION
20492 Crescent Bay Dr.Ste.104.Lake Forest CA 92630
Tel : (949)420-0409
Model : N-063
Type of Gas : Natural Gas
BTU Input : Max. 179,000 ~ Min. 22,000
Recovery Rate : 241 Gallons/Hour
Inlet Gas Pressure : Min. 3.5 ~ Max. 10.5 inches
Manifold Gas Pressure : Min. 0.63 ~ Max. 2.3 inches
Electrical Rating : AC 120 Volts 60 Hz
Max. Water Pressure : Min. 15psi ~ Max. 150 psi
ANSI Z21.10.3 2000

DESIGN CERTIFIED

FOR YOUR SAFETY
Do not store or use gasoline or other flammable vapors and liquids in the vicinity of this or any other appliances

REQUIRED CLEARANCES TO COMBUSTIBLES

Minimum Clearances from Combustible of Non-combustible Construction		
Clearance	Outdoor Install	Indoor Install
Top of heater	36 inches	12 inches
Back of heater	1 inch	1 inch
Front of heater	24 inches	4 inches
Side of heater	6 inches	2 inches

SERIAL NUMBER XXXX. XX-XXXXXX

Made in JAPAN XXXX XXXXXX

⚠ WARNING

HIGH TEMP. WARNING
When using hot water or bathing,check the temperature first with your hand. Otherwise, you may get scalded.

FIRE WARNING
Do not leave easily flammable items near the heater or the air intake or exhaust. Otherwise a fire could occur.

PROHIBITED
VENTILATION WARNING (INDOOR ONLY)
Take care to provide adequate ventilation during heater use. However, do not use a range hood ventilation fan. Otherwise, carbon monoxide poisoning could occur.

PROHIBITED
Corrugated panelling PROHIBITED (Outdoor heater only)
Do not use corrugated panelling around the outdoor heater. It may cause carbon monoxide poisoning or a fire.

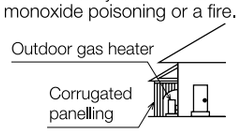

⚠ CAUTION

CONTACT PROHIBITED
BURN CAUTION
During heater use or soon after, do not touch high temperature parts such as the heater body, exhaust flue or exhaust outlet.

Please read Owner's Manual thoroughly to ensure proper use of the water heater. Incorrect operation can result in scalding and fire.

- Use only the gas type specified on the heater.
- For remote operation, use the remote control described in the Owner's Manual.
- When the remote control is connected, operate the remote control in accordance with the instructions displayed on it, and confirm ignition and extinguishment on the remote control display.
- Do not use water that has been stored inside the heater for a long period as drinking water or cooking water.
- Perform inspection and maintenance periodically in accordance with the Owner's Manual.
- If the temperature drops severly in winter and there is the possibility of the heater freezing, prevent freezing using the method described in the Owner's Manual. If this is not done, the heater may freeze and become damaged.
- If you are moving the water heater, contact the manufacturer.
- If a malfunction occurs(smoke from the exhaust port, burning smell, etc.) or an emergency occurs(earthquake, fire, etc.), stop using the water heater and contact your nearest service center to arrange for an inspection.
- Do not tamper with or modify the vent damper.
- Use only category Ⅲ venting material.
- Wiring diagram behind the front cover.

FOR YOUR SAFETY READ BEFORE OPERATING

WARNING: If you do not follow these instructions exactly, a fire or explosion may result causing property damage, personal injury or loss of life.

A. This water heater does not have a pilot. It is equipped with an ignition device that automatically lights the burner. Do not try to light the burner by hand.
B. BEFORE OPERATING smell all around the water heater area for evidence of leaking gas. Be sure to smell next to the floor because some gas is heavier than air and will settle on the floor.
WHAT TO DO IF YOU SMELL GAS.
   - Do not try to light any appliance.
   - Do not touch any electric switch, do not use any phone in your building.
   - Immediately call your gas supplier from a neighbor's phone. Follow the gas supplier's instructions.
   - If you cannot reach your gas supplier, call the fire department.
C. Use only your hand to turn the gas valve knob. Never use tools. If the knob will not turn by hand, don't try to repair it. Call a qualified service technician. Force or attempted repair may result in a fire of explosion.
D. Do not use this water heater if any part has been under water. Immediately call a qualified service technician to inspect the water heater and to replace any damaged parts.

OPERATING INSTRUCTIONS

1. STOP! Read the safety information above.
2. Turn off all electric power to the appliance.
3. Do not attempt to light the burner by hand.
4. Turn the gas control manual valve (installed on the gas supply line external to the unit) clockwise ↻ to the position.
5. Wait five (5) minutes to clear out any gas. If you then smell gas, STOP! Follow "B" in the safety information above on this label. If you don't smell gas, go to the next step.
6. Turn the gas control manual valve (installed on the gas supply line external to the unit) counterclockwise ↺ to the full ON position.
7. Turn on all the electric power to the appliance.
8. If the appliance will not operate, follow the instructions " To Turn Off Gas To Appliance" and call your service technician or gas supplier.

TO TURN OFF GAS TO APPLIANCE

1. Turn off all electric power to the appliance if service is to be performed.
2. Turn the gas control manual valve (installed on the gas supply line external to the unit) clockwise ↻ to the full OFF position.

DANGER

Vapors from flammable liquids will explode and catch fire causing death or severe burns.
Do not use or store flammable products such as gasoline, solvents or adhesives in the same room or area near the water heater.

Keep flammable products:
1. Far away from heater.
2. In approved containers.
3. Tightly closed
4. Out of children's reach

Vapors:
1. Cannot be seen
2. Vapors are heavier than air
3. Go a long way on the floor
4. Can be carried from other rooms to the main burner by air currents.

DANGER

Hot Water Heater temperature over 125 ℉ can cause severe burns instantly or death from scalding.
Children, disabled and elderly are at the highest risk of being scalded.
Feel water temperature before bathing or showering.
Temperature limiting valves are available, ask professional person.

WARNING: California Proposition 65 lists chemical substances known to the state to cause cancer, birth defects, death, serious illness or other reproductive harm. This product may contain such substances, be their origin from fuel combustion (gas, oil) or components of the product itself.

A temperature and pressure relief valve listed as complying with the standard for Relief Valve and Automatic Gas Shutoff Devices for Hot Water Supply System, ANSIZ21. 22. shall be installed at the time of installation of the heater in the location specified by the manufacturer. Local codes shall govern the installation of relief devices for safety operation of the water heater. The relief valve must not be removed or plugged.